e-Front runners

MSA CONTROL - (11) 3961-1171 - comercial@msacontrol.com.br

AC power regulator
APR eco series

AC power regulator
APR-N series

AC power regulator
APR-α series

AC power regulator
PWM-APR series

MINI UPS
J series

AC POWER REGULATORS

NOISE SUPPRESSION FILTERS

CONTROL POWER TRANSFORMERS

Harmonic suppresion

LOW
VOLTAGE
EQUIPMENT
Up to 600 Volts

Noise suppresion filter
RNFM series

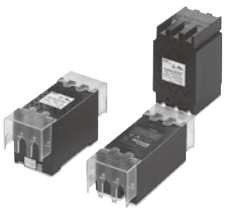

Noise suppresion filter
RNFT series

Noise suppresion filter
RNFHA series

INDIVIDUAL CATALOG 10

from D&C CATALOG 20th Edition

01 02 03 04 05 06 07 08 09 **10** 11 12

Fuji Electric FA Components & Systems Co., Ltd.

10 AC Power Regulators Noise Suppression Filters Control Power Transformers

MINIMUM ORDERS

Orders amounting to **less than ¥10,000** net per order will be charged as ¥10,000 net per order plus freight and other charges.

WEIGHTS AND DIMENSIONS

Weights and dimensions appearing in this catalog are the best information available at the time of going to press. FUJI ELECTRIC FA has a policy of continuous product improvement, and design changes may make this information out of date.
Please confirm such details before planning actual construction.

INFORMATION IN THIS CATALOG IS SUBJECT TO CHANGE WITHOUT NOTICE.

AC power regulators

■ Variation of internal accessory

Series name	Application	Features	Type	Page
APR-L (3-phase)	• Heater control • Incandescent lighting intensity control	• Low cost • Various setting inputs • Various voltage types	**RPLD2, RPLD0** 	10/30
APR-α (single-phase)		• Low cost • Compact and lightweight • Various setting inputs • Various voltage types	**RPAE2, RPBE2, RPCE2** 	10/18
Single-phase APR-N	• Heater control • Incandescent lighting intensity control • Vibrators • DC power supply in combination with a rectifier	• Multi-function • Various applicable loads • Versatile feedback Control functions • Various current and voltage types • Switchable phase control and cyclic control	**RPNE2, RPNE4** 	10/2
3-phase APR-N			**RPNW2, RPNW4** 	
Single-phase PWN-APR	• Heater control • Intensity control for various lighting • Motor control • Power supplies of various rated voltages	• IGBT elements · PWM Sine wave output using control method • Harmonic suppression measures not required.	**RPWE2, RPWD2** 	10/26
3-phase PWN-APR				

10

AC power regulators, APR-N series

■ Description

The APR-N series provides high functionality with improved functions and performance as a successor to the APR-MX2 series.

■ Features

• Thyristor pure reverse parallel (6-arm) is standardized (3-phase).

· Almost no even harmonic current is generated, and so countermeasures for harmonic current are easy compared with systems with mixed reverse parallel.
· Magnetic flux deviation in transformer primary control is unlikely to occur, and so the transformer can be more compact and highly efficient.
· Control characteristics are improved for unbalanced loads.

Load current waveform example
(phase angle α = 90°)

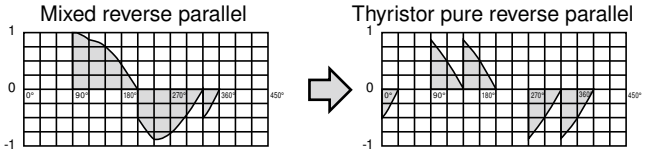

• Imbalance compensation (3-phase)

Imbalance compensation can be performed by making settings using the setting and display module if there is a load imbalance or power supply imbalance.

• 3-phase, 4-wire circuits supported (3-phase models with control method T or A)

Linearity of ±3% FS is achieved for 3-phase, 4-wire circuits. (Optional specifications: Specify ZB4.)
Also, connection of an external diode to the neutral phase is not required.
Note: The control phase angle is different from the standard 3-phase models.
Do not use this for 3-phase, 3-wire circuits.

• Switch between phase control and cycle control.

· Flicker prevention cycle control (staggering the power application cycle of 50 units max.) enables distributed load operation. (Optional specifications: ZAP or ZAX is required.)
· Perform cycle control for loads with a large change in resistance value (e.g., pure metal) using inrush current automatic suppression control (composite control) independent of soft start time.(models with control method A only).
· Switch between phase control and cycle control during operation.
(using a display device or network communications).

• Built-in high-precision feedback control (except models with control method T)

Control accuracy of ±1% FS for constant current control, constant voltage control, and constant power control.
Built-in high accuracy control circuits improve temperature control accuracy, save space, reduce wiring, and help decrease total costs.

3-phase, 20A with display (ZA ■ B3) | 3-phase, 100A with communications board (ZA ■) | Single-phase, 20A

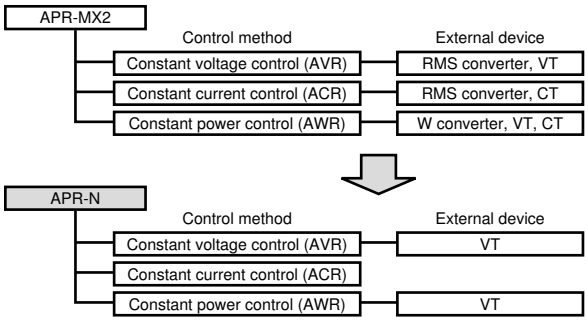

Note: The figure above is for single-phase.

• Independent settings for soft start time and soft increase/decrease time

• Built-in advanced heater burnout detection (except models with control method T. This functionality requires a communications board and a setting and display module.)

Advanced heater burnout detection (equivalent to LA-3A) enables detecting burnouts in 1 of 10 elements for single-phase operation.
Burnouts can be detected in 1 of 9 elements for 3-phase, 3-wire connections (line current detection).
Burnouts can be detected in 1 of 15 elements for 3-phase, 4-wire connections (line current detection).
Use in applications for heaters of the same material and same capacity (e.g., alloy, pure metal, or silicon carbide).

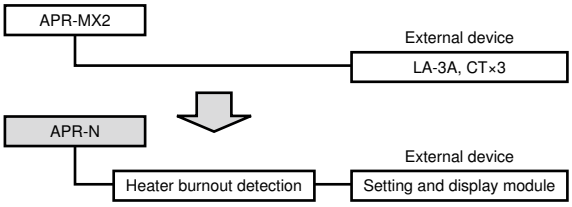

Note: The figure above is for 3-phase.
An external CT is required for single phase.

• Enhanced error detection

A total of 12 errors, including major failures and minor failures, are displayed using alarm LEDs.
· Thyristor error (except models with control method T)
· Current limit detection (except models with control method T)
· External setting input not connected (burnout)
· Cooling fan service life warning by monitoring the fan speed (models with fan only)
These and more have been added.

• Enhanced optional accessories

· The setting and display module enables a variety of monitoring, high-accuracy digital settings, and function settings.
· Adding a communications board enables a wide range of communications specifications.
· Easily perform operation or monitoring and change settings by linking to a PLC or touch panel.
· Finger guard (IP20)

These and more have been added.
Refer to pages 10/5 and 10/6 for details.

• Full lineup of products compliant with international standards

Note: Inquire about the status of compliance.

• Compliance with RoHS Directive

The APR-N provides compliance with the European Union's RoHS Directive on the restriction of use of hazardous substances as a standard feature.
The APR-N is ideal for environments in which the use of these six hazardous substances is restricted.
Six hazardous substances: Lead, mercury, cadmium, hexavalent chromium, polybrominated biphenyls (PBB), and polybrominated diphenyl ether (PBDE)

■ Type and ratings

Type number (i.e., product code)	No. of phases	Input voltage (V)	Rated current (A)	Rated load capacity (kVA) (*1)	Built-in rapid fuse (*2)
RPNE2020-T	Single-phase	100-240	20	2-4.8	CR2LS-30G
RPNE2020-A					
RPNE2045-T			45	4.5-10.8	CR2LS-75G
RPNE2045-A					
RPNE2060-T			60	6-14.4	CR2LS-100G
RPNE2060-A					
RPNE2100-T			100	10-24	CR2L-150G
RPNE2100-A					
RPNE2150-T			150	15-36	CR2L-200G
RPNE2150-A					
RPNE2250-T			250	25-60	CS5F-350
RPNE2250-A					
RPNE2350-T			350	35-84	CS5F-500
RPNE2350-A					
RPNE2450-T			450	45-108	CS5F-600
RPNE2450-A					
RPNE2600-T			600	60-144	CS5F-800
RPNE2600-A					
RPNE2800-T, RPNE2800-A			800	80-192	CS5F-800
RPNE2A00-T, RPNE2A00-A			1000	100-240	CS5F-1000
RPNE2A20-T, RPNE2A20-A			1200	120-288	CS5F-1200
RPNE4020-T		380-440	20	7.6-8.8	CR6L-30G
RPNE4020-A					
RPNE4045-T			45	17.1-19.8	CR6L-75G
RPNE4045-A					
RPNE4060-T			60	22.8-26.4	CR6L-100G
RPNE4060-A					
RPNE4100-T			100	38-44	CR6L-150G
RPNE4100-A					
RPNE4150-T			150	57-66	CR6L-200G
RPNE4150-A					
RPNE4250-T			250	95-110	CS5F-350
RPNE4250-A					
RPNE4350-T			350	133-154	CS5F-500
RPNE4350-A					
RPNE4450-T			450	171-198	CS5F-600
RPNE4450-A					
RPNE4600-T			600	228-264	CS5F-800
RPNE4600-A					
RPNE4800-T, RPNE4800-A			800	304-352	CS5F-800
RPNE4A00-T, RPNE4A00-A			1000	380-440	CS5F-1000
RPNE4A20-T, RPNE4A20-A			1200	456-528	CS5F-1200

■ Type and ratings

Type number (i.e., product code)	No. of phases	Input voltage (V)	Rated current (A)	Rated load capacity (kVA) (*1)	Built-in rapid fuse (*2)
RPNW2020-T	3-phase	200-240	20	6.9- 8.3	CR2LS-30G
RPNW2020-A					
RPNW2045-T			45	15.6-18.7	CR2LS-75G
RPNW2045-A					
RPNW2060-T			60	20.8-24.9	CR2LS-100G
RPNW2060-A					
RPNW2100-T			100	34.6-41.6	CR2L-150G
RPNW2100-A					
RPNW2150-T			150	52.0-62.4	CR2L-200G
RPNW2150-A					
RPNW2250-T			250	86.6-103.9	CS5F-350
RPNW2250-A					
RPNW2450-T			450	155.9-187.1	CS5F-600
RPNW2450-A					
RPNW2600-T			600	207.8-249.4	CS5F-800
RPNW2600-A					
RPNW2800-T, RPNW2800-A			800	277.1-332.6	CS5F-800
RPNW2A00-T, RPNW2A00-A			1000	346.4-415.7	CS5F-1000
RPNW2A20-T, RPNW2A20-A			1200	415.7-498.8	CS5F-1200
RPNW4020-T		380-440	20	13.2-15.2	CR6L-30G
RPNW4020-A					
RPNW4045-T			45	29.6-34.3	CR6L-75G
RPNW4045-A					
RPNW4060-T			60	39.5-45.7	CR6L-100G
RPNW4060-A					
RPNW4100-T			100	65.8-76.2	CR6L-150G
RPNW4100-A					
RPNW4150-T			150	98.7-114.3	CR6L-200G
RPNW4150-A					
RPNW4250-T			250	164.5-190.5	CS5F-350
RPNW4250-A					
RPNW4450-T			450	296.2-342.9	CS5F-600
RPNW4450-A					
RPNW4600-T			600	394.9-457.3	CS5F-800
RPNW4600-A					
RPNW4800-T, RPNW4800-A			800	526.5-609.7	CS5F-800
RPNW4A00-T, RPNW4A00-A			1000	658.2-762.1	CS5F-1000
RPNW4A20-T, RPNW4A20-A			1200	789.8-914.5	CS5F-1200

Note: *1 The value for the rated load capacity is calculated using the following equation.
Rated load capacity (single-phase) = Rated input voltage x Output current
Rated load capacity (3-phase) = $\sqrt{3}$ x Rated input voltage x Output current
*2 To replace only the built-in rapid fuse, use the type number that is listed. For models with a microswitch (CR2L, CR2lS, CR6L), replace G with S.
If the unit is certified for UL standards, the built-in rapid fuse is also certified for UL standards.

■ Specification

Item		Specification								
Main circuit power supply	Single-phase	100 to 240V, 380 to 440V, 380 to 480V AC±10%, 50/60Hz ±2.5Hz (automatic frequency detection and switching)								
	3-phase	200 to 240V, 380 to 440V, 380 to 480V AC±10%, 50/60Hz±2.5Hz (automatic frequency detection and switching)								
Rated current (A)	Single-phase (ambient temperature of 50°C)	20	45	60	100	150	250	350	450	600
	3-phase (ambient temperature of 40°C)							–		
Cooling method		Self-cooled				Fan-cooled				
Control circuit power supply	Power supply voltage	Single-phase: 100 to 240V AC ±10% (*1.) 3-phase: 200 to 240V AC±10%								
	Power supply capacity (VA) single-phase	34				40	45			
	Power supply capacity (VA) 3-phase	39				58	72	–	78	128
Internal heat generation (W)	Single-phase	47	74	89	133	203	294	377	510	700
	3-phase	90	170	210	330	560	840	–	1490	2070
Applicable load	Phase control	Resistive load, inductive load, transformer primary side, rectifier primary side								
	Cyclic control	Resistive load, inductive load, transformer primary side (Applicable only for single-phase models with control method P.)								
Control	Waveform control	Thyristor pure reverse parallel connection (single-phase and 3-phase) Phase control or cyclic control (single-phase: intermittent, 3-phase: continuous) (switched with DIP switch)								
	Output voltage adjustment range	0% to 100% (effective value) of main circuit power supply voltage (except thyristor voltage drop)								
	I/O characteristics	Effective value linear characteristics and linearity ±3% FS max. (for a resistive load and for a setting signal of 10 to 90%.)								
	Power supply voltage compensation	Compensation for output fluctuation to ±3% FS max. relative to ±10% fluctuation in power supply voltage (for a setting signal of 10% to 90%, applies to models with control method T or A.)								
	Power supply voltage compensation setting	Fine tuning of max. output voltage, built-in PVC knob (applies to models with control method T or A).								
Setting	Soft start time and soft up/down time setting	Built-in ST knob. 0.5 to 10s or 5 to 100s. Soft up/down time can be set to 0.5s (switched with DIP switch).								
	CLR (current limit) setting	Built-in CLR knob. 0% to 102% of rated current (not for models with control method T)								
	P adjustment	Built-in P knob. 0.1 to 0.5 times proportionate gain (not for models with control method T)								
	I adjustment	Built-in I knob. Integral time of 25ms to 125ms (not for models with control method T)								
	Gradient setting	0% to 100% of output voltage 1. External variable resistor: 1kΩ (B characteristics: 1/2W min.), 2. 1 to 5V DC signal (1 and 2 switched with DIP switch), 3. Built-in GRD knob (optional)								
	Base load setting	0% to 100% of output voltage. Built-in BL knob (optional). Reverse gradient characteristics are enabled using combination with gradient settings.								
	Manual setting	External variable resistor: 1kΩ (B characteristics 1/2W min.)								
	Automatic setting	Current signal: 4 to 20mA DC (Zin = 100Ω) Voltage signal: 0 to 5V DC, 1 to 5V DC (Zin = 10kΩ) (switched with DIP switch)								
Function	Run/stop switching signal (RUN)	No-voltage contact input (contact voltage: 12V DC, 10mA)								
	Auto/manual switching signal (RUN)	No-voltage contact input (contact voltage: 12V DC, 10mA)								
	Alarm reset signal (RST)	No-voltage contact (momentary) input (contact voltage: 12V DC, 10mA)								
	Automatic inrush current suppression	Current is suppressed by switching the phase angle so that the current is 90% max. of the current limit setting value when cyclic control is used. (Applies only to models with control method A.) Applicable load: Alloy, nichrome, pure metal, or silicon carbide.								
	Feedback enable/ disable switching	DIP switch ON side: Purchased control method OFF side: Models with control method A (*2)								
	Parallel operation master/slave selection	DIP switch ON side: Master OFF side: Slave Max. number of connected slaves: 50 Communications board (RPN003-AP or RPN003-AX) and connection cable required (optional).(*3)								
	Network communications	Communications standard: RS-485 compliant 2-wire half-duplex asynchronous Protocol: Modbus RTU compliant, Max. number of connectable units: 31 Communications board (RPN003-AM), setting and display module (APD1), and connection cable for remote operation (RPN002-□) required (optional).								

■ Specification

Item		Specification
Display		1. Drive monitor display (green LED lit at output), 2. Alarms and errors displayed with red, yellow, and green LEDs, 3. Digital display using APD1 (optional).
Alarm contact output		Relay contacts, major failure (SPST-NO contacts, 250V AC, 1A), minor failure (SPST-NO contacts, 250V AC, 1A)
Error detection and protection	Overcurrent	Current at approx. 120% min. of rated current detected by built-in CT (except models with control method T)
	Thyristor error	Thyristor short-circuit failure detected at output stop or output at 0% (except models with control method T)
	Rapid fuse blowout	Detected at contact welding of built-in rapid fuse. Main element protection.
	Overheat error	Detected with temperature sensor (Single-phase: fan-cooled models only, 3-phase: all models)
	CPU memory error	Memory error detected at startup
	Communications error (optional)	Detected when communications cannot be performed correctly using the communications board (optional).
	Heater burnout	"Burnout detection determined by comparing the built-in HT knob (heater burnout judgment setting level 3 to 100%) and below the current value. (Standard function. Single-phase only.) (*4)"
	External setting input not connected	"Detected when 1. The current for the voltage setting signal is not connected or disconnected (4mA max. or 1V max. or 2. When the manual or gradient setting is not connected. (*5.) "
	Power supply error	Detected when the power supply frequency is not 45 to 65 Hz.
	Current limit detection	Detected when a load current that is the same as the current limit set value is detected.
	Undervoltage	Detected when the control power supply voltage drops below 80% of the rated voltage.
	Overvoltage	Detected when the control power supply voltage exceeds 115% of the rated voltage.
	Cooling fan service life (fan-cooled models only)	Detected when the rated number of rotations drops below 70% to 200rpm by monitoring the number of revolutions of the cooling fan.
Feedback control (phase control only)		AC CLR (models with control method A) AC ACR + AC CLR (models with control method B) AC AVR + AC CLR (control method type C) AC AWR + AC CLR (models with control method D) DC AVR + AC CLR (models with control method E) DC ACR + AC CLR (models with control method F) Control accuracy: ±2% FS for AC ACR, otherwise, ±1% FS AC CLR functionality has priority for models with control method B, C, D, E or F. Accuracy conditions: Power supply voltage fluctuation of ±10% with a constant load, or 1 to 4 times the load fluctuation at a constant power supply voltage.
Environment	Ambient temperature	–5 to 50°C (decrease relative to rated current if ambient temperature is between 50 and 55°C) –5 to 40°C (decrease relative to rated current if ambient temperature is between 40 and 55°C)
	Storage temperature	-20 to 60°C
	Ambient humidity	30% to 90% RH (no condensation)
	Others	Free from corrosive gas, dust, or vibration. Indoor use. Altitude up to 1000 m.
Insulation	Withstand voltage (main circuit to ground)	2000V AC, 1 minute (200 to 240V models), 2500V AC, 1 minute (380 to 440V models)
	Insulation resistance (to ground)	10MΩ min. (500V DC megger)

Note: *1 Be sure to perform operation with a rated voltage of either 110V (100V system) or 220V (200V system).
Adjust the maximum output voltage using the PVC setting if the rated voltage is 115 to 120V (100V system) or 230 to 240V (200V system). (models with control method T or A only)
*2 Use for test operation (i.e., operation test with temporary load) with models with control method B, C, D, E, or F.
The control method will not change even if a model with control method T or A is used on the OFF side.
*3 The RPN003-AX is compatible with the MX series and MX2 series.
*4 Heater burnout detection operates for single-phase phase control except for models with control method T.
For cyclic control, load open detection is used.
A setting and display module is required for advanced heater burnout detection (single-phase and 3-phase.)
*5 The "external setting input not connected alarm" does not operate if the voltage signal is set to 0 to 5V DC.
*6 Inquire about models with a rated current of 800A, 1000A, or 1200A.

■ Type number nomenclature

RPN □□□□□ – □■ – ■■■ – ■■ / ■■

Note: *1 In the type number, the white boxes are required items and the black boxes are optional items.
For items with no specification, fill in the box with a hyphen or slash.

APR-N series

No. of phases

E: Single-phase thyristor pure reverse parallel
W: 3-phase thyristor pure reverse parallel

Input voltage

2: 100 to 240V (single-phase)
200 to 240V (3-phase)
4 (*2): 380 to 440V, 380 to 480V
9: Special voltage

A transformer is enclosed if the input voltage is not 100 to 240V.
Inquire about special voltage.
Note: *2 Specify UL or CE as the international safety standard for 380 to 480V.

Rated current

020: 20A
045: 45A
060: 60A
100: 100A
150: 150A
250: 250A
350: 350A (single-phase only)
450: 450A
600: 600A
800: 800A
A00: 1000A
A20: 1200A

Inquire about 800A, 1000A, and 1200A.

Control method

International safety standards

Blank: No specification
UL: Compliant with UL, cUL, and CE marking
CE: Compliant with CE marking

Inquire about the status of compliance.

Others

Blank: No specification
01: No operation transformer
02: Test report (Japanese and English) enclosed
03: No operation transformer, test report (Japanese and English) enclosed

The test report is in the Fuji Electric standard format.
The report can be made with special specifications if specified by the customer.
This is not displayed in the unit type number.

Specification

Blank: Standard
Z (*3): Unit optional accessories

Setting device

Blank: No
1: Setting device, 1 set
2: Setting devices, 2 sets
3: Setting devices, 3 sets
4: Setting devices, 4 sets

Setting device type: RPN001 (variable resistor, nameplate, knob, and adhesive sheet)
This is not displayed in the unit type number.

Control method

Code	Control method	Required external devices (sold separately)	Control method overview
T	No feedback function	–	No built-in CT. (Functions such as overcurrent protection and heater burnout detection are not included.) This method applies to loads with small changes in resistance, such as alloy heaters.
A	Current CLR	–	CLR = Current limit: Output voltage is limited so that the output current does not exceed the CLR setting. This method is used for applications (such as pure metal heaters) for which the maximum current that flows to the load must be limited.
B	AC ACR + AC CLR	–	ACR = Constant current control: Control is performed so that the output current is proportional to the set value. This method is used for applications for which the current must be constant, such as pure metal heaters or direct power application heating.
C	AC AVR + AC CLR	VT (type number: PT-5S) single-phase: 1 VT (type number: PT-5S) 3-phase: 2	AVR = Constant voltage control: Control is performed so that the output voltage is proportional to the set value. This method is used for applications that require output voltage accuracy.
D	AC AWR + AC CLR	VT (type number: PT-5S) single-phase: 1 VT (type number: PT-5S) 3-phase: 2	AWR = Constant power control: Control is performed so that the output power is proportional to the set value. This method is used for applications that require heat level control, such as silicon carbide heaters or sensorless operation.
E	DC (or AC) AVR + AC CLR (feedback input: 0 to 10V DC)	Isolating converter (high-speed response) or VT (type number: PT-5S) + RMS converter (type number: RMS-2)	AVR = Constant voltage control: The functionality is the same as for current given above. This method is used for applications that require accuracy, such as the transformer secondary side or rectifier secondary side. Control is performed so that the feedback value is 10V when the set value is 100%.
F	DC (or AC) ACR + AC CLR (feedback input: 0 to 10V DC)	Isolating converter (high-speed response) or CT (type number: CT-5S) + RMS converter (type number: RMS-2)	ACR = Constant current control: The functionality is the same as for current given above. This method is used for applications that require accuracy, such as the transformer secondary side or rectifier secondary side. Control is performed so that the feedback value is 10V when the set value is 100%.
P	Transformer primary control using cyclic control	Enclosed CT (type number: CT-5S)	Single-phase only. This method can be applied to isolating transformers and resistive loads (resistance value changes of 20% max.). Output will stop due to load error if the load drops below 30% of the APR rated capacity.

Specify a model with control method E if connection is made to an already installed W converter (W-2).

Note: *3 Unit optional accessories

Main optional specification name	Description	Option specification number (*4.)
Soft start time 0.05s min.	Soft start time variable range: 0.05 to 10s/0.05 to 100s	**RPN□□□□□-□■-Z06**
Built-in base load setting	Base load setting included on control printed circuit board	**RPN□□□□□-□■-Z07**
Built-in gradient setting	Gradient setting included on control printed circuit board	**RPN□□□□□-□■-Z43**
Control power supply separation	Control power supply terminal block (L11-L21-L31) internal wiring deletion	**RPNW□□□□-□■-Z72**
Communications board: Parallel operation supported (*5)	Flicker prevention and communications board for parallel operation	**RPN□□□□□-□■-ZAP**
Communications board: MX compatible parallel operation supported (*6)	MX and MX2-series compatible parallel operation communications board	**RPN□□□□□-□■-ZAX**
Communications board: Modbus RTU supported	Communications board for Modbus RTU	**RPN□□□□□-□■-ZAM**
APD1 + APD1 mounting bracket	APD1 and a connection cable are attached to the front of the unit.	**RPN□□□□□-□■-ZB3**
3-phase, 4-wire supported	Control board changed to 3-phase, 4-wire (models with control method T or A only)	**RPNW□□□□-□■-ZB4**
Function code change (*7)	Shipment made with the specified function code	**RPN□□□□□-□■-ZC■**
Input voltage: Special voltage supported (*8)	TR1-70R/E1 operation transformer enclosed	**RPNE9□□□-□■-ZE1**

Note: *4 To specify multiple unit option specifications, list the specification numbers after Z.
For example, the following is the order type number for a unit with the following options: Soft start time 0.05s min., communications board, parallel operation, and 3-phase, 4-wire.
Order type number: RPNW □□□□ - □■ -Z06APB4

*5 Not compatible with the MX series and MX2 series. Also, cyclic control cannot be performed using both single-phase and 3-phase.
When parallel operation is used, heater burnout detection cannot be used with the setting and display module for the slave device.

*6 Compatible with the MX series and MX2 series. Also, cyclic control cannot be performed using both single-phase and 3-phase.
When parallel operation is used, heater burnout detection cannot be used with the setting and display module for the slave device.

*7 Before shipment, settings are changed in-house using the setting and display module. A setting and display module is not enclosed at shipment. Each unit can be handled individually. Inquire for details.

*8 The primary side tap voltage for the TR1-70R/E1 operation transformer is 250, 254, 260, 265, 277, or 305V AC.

■ Other optional accessories (sold separately)

• Mounting bracket for external cooling installation

Single-phase (RPN004-E □□)

Type	Description
RPN004-E02	For RPNE□020-□
RPN004-E06	For RPNE□045-□ and RPNE□060-□
RPN004-E10	For RPNE□100-□
RPN004-E15	For RPNE□150-□
RPN004-E25	For RPNE□250-□
RPN004-E35	For RPNE□350-□
RPN004-E45	For RPNE□450-□
RPN004-E60	For RPNE□600-□

3-phase (RPN004-W □□)

Type	Description
RPN004-W02	For RPNW□020-□
RPN004-W06	For RPNW□045-□ and RPNW□060-□
RPN004-W10	For RPNW□100-□
RPN004-W15	For RPNW□150-□
RPN004-W25	For RPNW□250-□
RPN004-W45	For RPNW□450-□
RPN004-W60	For RPNW□600-□

• Finger guard

Single-phase (RPN005-E □□)

Type	Description
RPN005-E02	For RPNE□020-□
RPN005-E06	For RPNE□045-□ and RPNE□060-□
RPN005-E10	For RPNE□100-□
RPN005-E15	For RPNE□150-□
RPN005-E25	For RPNE□250-□
RPN005-E35	For RPNE□350-□
RPN005-E45	For RPNE□450-□
RPN005-E60	For RPNE□600-□

3-phase (RPN005-W □□)

Type	Description
RPN005-W02	For RPNW□020-□
RPN005-W06	For RPNW□045-□ and RPNW□060-□
RPN005-W10	For RPNW□100-□
RPN005-W15	For RPNW□150-□
RPN005-W25	For RPNW□250-□
RPN005-W45	For RPNW□450-□
RPN005-W60	For RPNW□600-□

• Main circuit terminal cover

3-phase (RPN006-W □□)

Type	Description
RPN006-W02	For RPNW□020-□
RPN006-W06	For RPNW□045-□ and RPNW□060-□
RPN006-W10	For RPNW□100-□
RPN006-W15	For RPNW□150-□
RPN006-W25	For RPNW□250-□
RPN006-W45	For RPNW□450-□
RPN006-W60	For RPNW□600-□

Note: The single-phase models are provided in standard models, and so there is no main circuit terminal cover available as an option.

• Feedback control CT and VT

Item	Type	Rated primary input	Rated secondary output
CT	CT-5S	20A, 45A, 60A 100A, 150A, 250A 350A, 450A, 600A	0.1A 5VA and Class 1
VT	PT-5S	100V, 110V	10V 5VA and Class 1
		200V, 220V	
		380V	
		400V, 440V	
		420V, 460V	
		440V, 480V	

Note: Number of primary pass-through turns for CT-5S: 5 turns for 20A, 3 turns for 45A, 2 turns for 60A, and 1 turn otherwise.
The primary voltage for PT-5S is a 2-tap input except for 380V.

• Setting and display module, communications board, and connection cable for remote operation

Item	Type	Name	Specification
Setting and display module	APD1	–	–
Cable	RPN002-1	Connection cable for remote operation	Length: 1m
	RPN002-3	Connection cable for remote operation	Length: 3m
	RPN002-5	Connection cable for remote operation	Length: 5m
Communications board	RPN003-AP	Flicker prevention and communications board for parallel operation	–
	RPN003-AX	MX and MX2-series compatible parallel operation communications board	–
	RPN003-AM	Communications board for Modbus RTU	–

Note: Only one communications board of any type can be mounted.
Specify ZA □ in the unit option specifications to have the board mounted and shipped.

■ External connections

• External connections (single-phase)

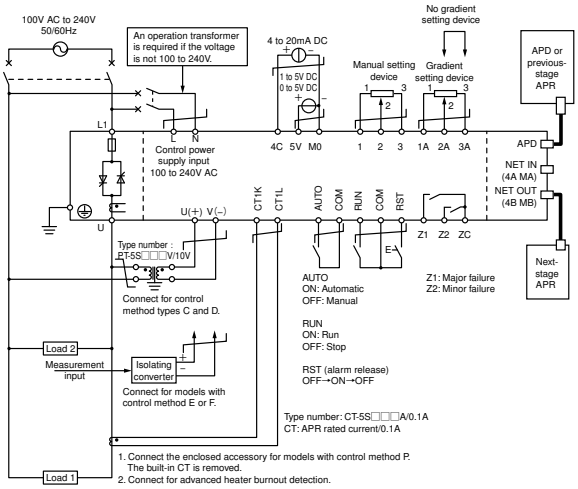

External connection (full connection with no function allocation changes)

• External connection (3-phase)

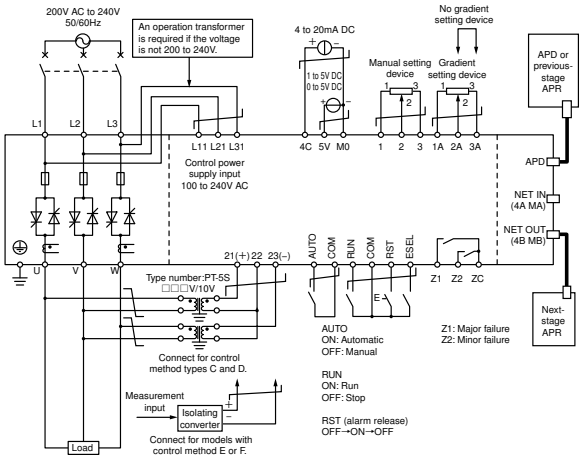

External connection (full connection with no function allocation changes)

• Control terminal functions using setting and display module (SW8: ON)

You can make function code settings using a setting and display module and delete external wiring or change functions using network communication.

Control terminals	Wiring	Remarks
RUN	Required	Operation is not performed when the RUN terminal is OFF. When the RUN terminal is ON, the unit will run or stop when the RUN/STOP key is pressed on the setting and display module. Operation using the RUN/STOP key on the setting and display module is recorded in non-volatile memory. If the last operation is RUN, the unit will run or stop according to the RUN terminal ON/OFF status. If the last operation is STOP, the unit will not run even if the RUN terminal is ON. The unit will run or stop only when the RUN terminal is turned ON or OFF if function code 1.b16 is set to OFF. The unit can be started or stopped using network communications if the RUN terminal is ON.
1, 2, 3 1A, 2A, 3A	Selectable	Settings can be made using a setting and display module for network communications, and so wiring is not required. The functions of the setting device (e.g., CLR and ST) for adjusting the APR unit can be allocated to an external setting device.
AUTO RST	Selectable	Operation can be performed using a setting and display module for network communications, and so wiring is not required. Alarms can also be reset using the RESET key on the setting and display module. Can be allocated HIGH setting/LOW setting switching input for two-position control.
4C, 5V, M0	Selectable	Control can be performed using network communications if control is made using PLC output.
Z1, Z2, ZC	Selectable	Alarm codes are displayed on the setting and display module. Network communications can be used to read alarm codes and check if there are major failures or minor failures.

• Main circuit and control power supply connection (single-phase)

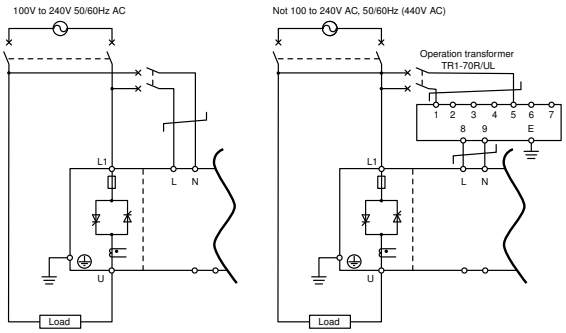

• Main circuit and control power supply connection (3-phase)

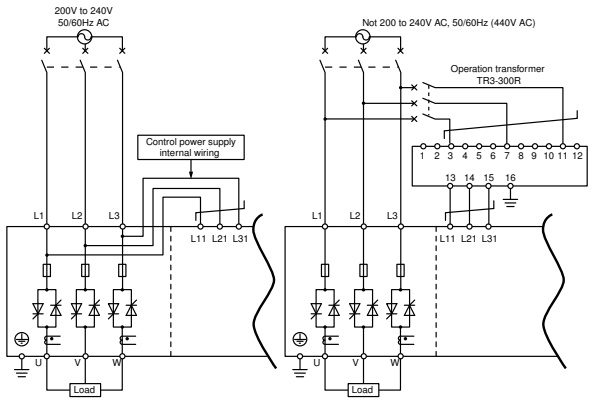

■ Dimensions, mm

■ Single-phase

• RPNE □ 020, RPNE □ 045, RPNE □ 060

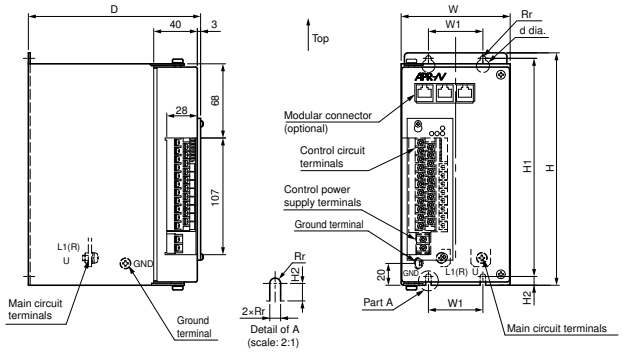

Type	W	H	D	W1	H1	H2	d	r	Mass (kg)
RPNE□020	100	213	158	50	200	8	12	2.5	2.6
RPNE□045	114	213	183	60	200	8	12	2.5	3.3
RPNE□060									

• RPNE □ 100, RPNE □ 150, RPNE □ 250, RPNE □ 350, RPNE □ 450, RPNE □ 600

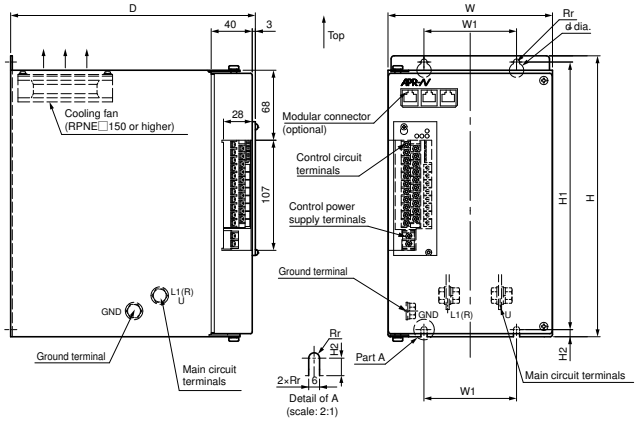

Type	W	H	D	W1	H1	H2	d	r	Mass (kg)
RPNE□100	144	224	238	90	210	8	14	3	5.3
RPNE□150	160	273	238	90	260	7	14	3	6.4
RPNE□250	178	335	238	120	320	8	15	3.5	10.0
RPNE□350	200	345	263	150	330	8	15	3.5	13.0
RPNE□450									
RPNE□600	207	360	288	157	345	8	15	3.5	14.8

■ 3-phase

• RPNW □ 020, RPNW □ 045, RPNW □ 060, RPNW □ 100, RPNW □ 150

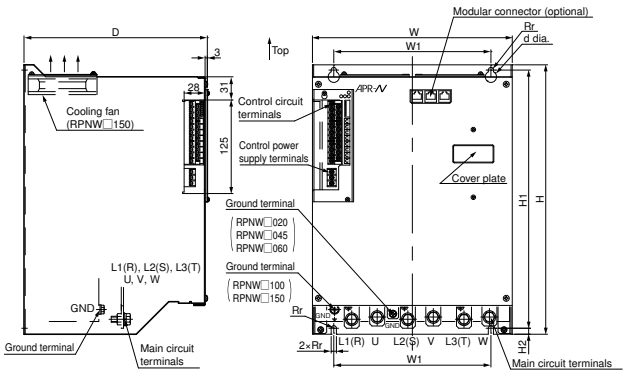

Type	W	H	D	W1	H1	H2	d	r	Mass (kg)
RPNW□020	230	273	160	200	260	6	14	3	5.0
RPNW2045	238	293	210	205	280	6	14	3	8.4
RPNW4045									9.1
RPNW2060	238	293	210	205	280	6	14	3	8.4
RPNW4060									9.1
RPNW□100	267	330	245	210	315	8	15	3.5	12.1
RPNW□150	267	360	245	210	345	8	15	3.5	13.0

• RPNW □ 250, RPNW □ 450, RPNW □ 600

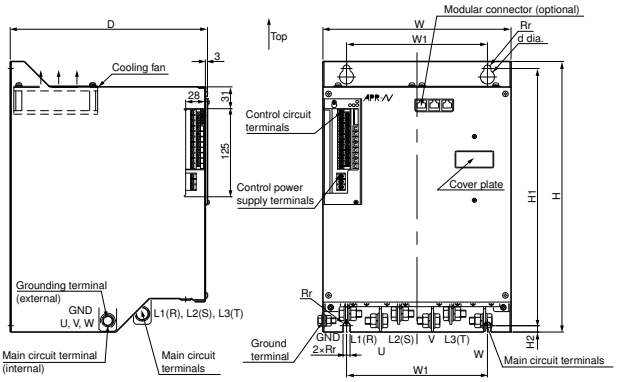

Type	W	H	D	W1	H1	H2	d	r	Mass (kg)
RPNW□250	267	384	280	200	365	9	20	5	16.9
RPNW□450	372	442	300	280	420	12	20	5	30.6
RPNW□600	372	528	310	280	505	11	24	6	37.0

• Enclosed items (if specified in order specifications)

Setting device Type number: RPN001	Used for setting methods, such as variable resistance setting, two-position control, and gradient control.

Rating: 1kΩJ 2.5W Type number: RA30YN20SB102J (manufacturer: Tokyo Cosmos)

Variable resistor

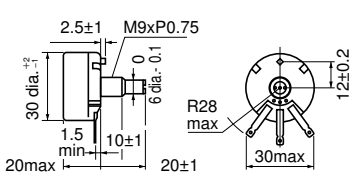

Mounting holes

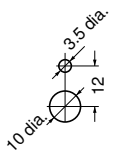

Nameplate

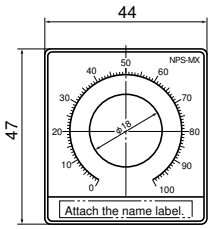

Knob

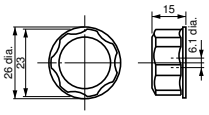

Name label sheet
(18 Japanese/English labels)

手動設定	MANUAL SET.
勾配設定	GRANDE SET.
CLR設定	CLR SET.
HIGH設定	HIGH SET.
LOW設定	LOW SET.
ソフトスタート時間設定	ST SET.
電源電圧補償設定	PVC SET.
ヒータ断線判定設定	HT SET.
ベースロード設定	BL SET.

Note: Control circuit terminal block allocation using the setting and display module is required except for manual setting and gradient setting.

Operation transformer (single-phase) Type number: TR1-70R/UL	Enclosed for input voltage code 4

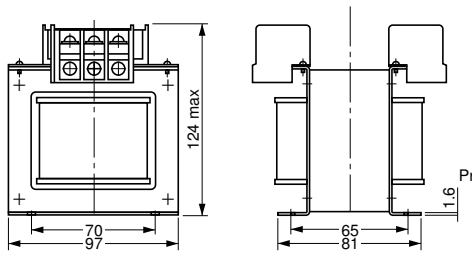

Output current	20 to 600A
Rating	Single-phase, 380, 400, 415, 440, 460, 480/220V, 70VA
Type	TR1-70R/UL

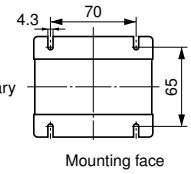

Primary voltage	Terminal number
380V	1-2
400V	1-3
415V	1-4
440V	1-5
460V (*1)	1-6
480V (*1)	1-7

Mass: 3.5g

Operation transformer (3-phase) Type number: TR3-300R	Enclosed for input voltage code 4

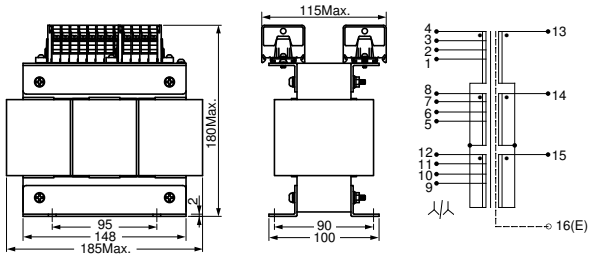

Output current	20 to 600A
Rating	3-phase, 380, 400, 440, 480/220V, 300VA
Type	TR3-300R

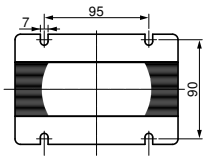

Primary voltage	Terminal number (R-S-T)
380V	1-5-9
400V	2-6-10
440V	3-7-11
480V (*1)	4-8-12

Mass: 8.5g

10

• Terminal block details

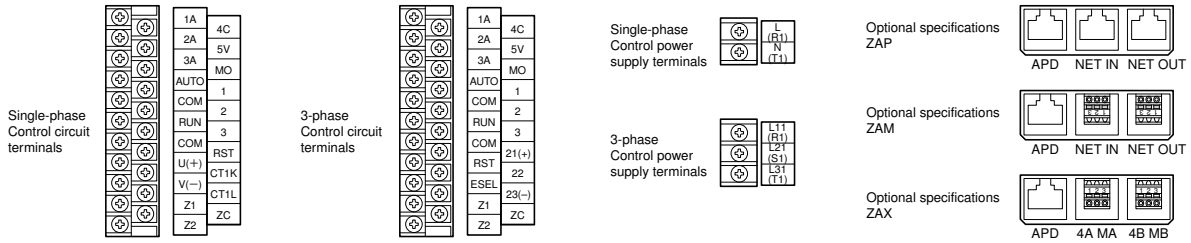

Category	Name	Symbol	Not used	Function description
Control power supply	Control power supply terminals	L(R1), N(T1)	–	Control circuit power supply, single-phase, 100 to 240V input
		L11(R1), L21(S1), L31(T1)		Control circuit power supply, 3-phase, 200 to 240V input
Control circuit	Manual setting input	1, 2, 3	Open	Manual setting input and HIGH setting input using connection of variable resistor
	Gradient setting input	1A, 2A, 3A	2A to 3A short-circuit	Gradient setting input and LOW setting input using connection of variable resistor
	Automatic setting input	4C, 5V, M0	Open	Voltage and current signal input of controller
	Automatic/manual switching input	AUTO, COM	–	Automatic setting input using external contact closed
				Manual setting input using external contacts open
	Run/stop input	RUN, COM	Short-circuit	RUN status using external contact closed and output OFF using external contact open
	Alarm reset	RST, COM	Open	Alarm release for closing of external contacts
	Alarm contact output	Z1, ZC		Internal contacts turn ON when alarm occurs for major failure
	Alarm contact output	Z2, ZC		Internal contacts turn ON when alarm occurs for minor failure
	External detection input	U(+), V(–)		Feedback detection input with connection of VT and DC converters
		U(+), V(–)		
	External CT input	CT1K, CT1L		CT connection using advanced heater burnout alarm
	External selection input	ESEL, COM		Switching of internal selection switch using external input (optional)
Parallel operation/ Modbus RTU	APD I/O	APD		Sending and receiving set values with connection of a setting and display module (APD)
				Receiving parallel operation signals from previous-stage APR in parallel operation
	Parallel operation I/O	NET IN NET OUT		Sending and receiving set values from the host in network communications
				Sending parallel operation signals to next-stage APR in parallel operation
		4A, MA 4B, MB		MX and MX2-series compatible input terminal
				MX and MX2-series compatible output terminal

Note: The function description for the control circuit applies when there are no changes in function allocations.
Note:*1 Do not use 460V or 480V if the voltage specifications of the unit are standard.

APD1 setting and display module

■ Features

The APR-N series enables a wide variety of operations and settings.

- · Fast selection and display switching using dial operation.
- · Display two elements at the same time with the data display and multi-indicator.
- · Perform unit diagnosis even with no data for the input signal check function.
- · Error detection history display functionality.
- · High-accuracy setting using digital display.
- · Customize functionality by changing function codes. (For example, allocate alarm outputs or allocate the terminal block for internal adjustment functionality.)
- · Function code copy functionality.
- · Compliance with EU RoHS Directive.
- · Compliance with UL and cUL standards.
- · Compliance with CE marking standards.

■ Specifications

Item	Specification
Type	**APD1**
Degree of protection	Panel surface: IP40, Back: (mounting surface): IP20
Operating location	Indoor
Ambient temperature	–5 to 50°C
Ambient humidity	30% to 90% RH (no condensation)
Environment	Location free from dust, corrosive gas (especially sulfidizing gas and ammonia gas), flammable gas, oil mist, water droplets, and direct sunlight. Location free from salt damage. Free from condensation due to sudden temperature changes.
Altitude	1000m max.
Ambient storage temperature	–20 to 60°C
Ambient storage humidity	30% to 90% RH (no condensation)
Installation method	Vertical installation (wall mounting)
Unit mounting tightening torque	
Mounting screws	M3 x 16
Tightening torque (±10%)	0.7N·m (7kgf·cm)
Mass	55g

■ Hardware specifications

Item	Specification
Connection cable for remote operation	Satisfies standards of U.S. ANSI, TIA, and EIA-568A Category 5. Straight cable (straight cable for 10Base-T and 100Base-TX)
Max. ommunications distance	20m (non-insulated)
External connection terminal	RJ-45 connector (modular jack connector)

Note: *1 If a setting and display module is used, a connection cable for remote operation (RPN002- □) and a communications board (RPN003-A □) are required.
*2 If a commercially available cable is used, do not use an STP (shielded) cable.

■ Dimensions, mm

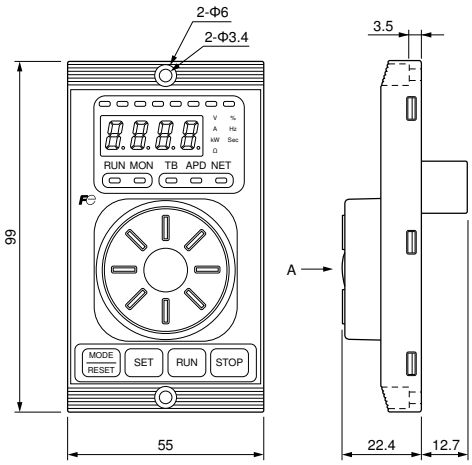

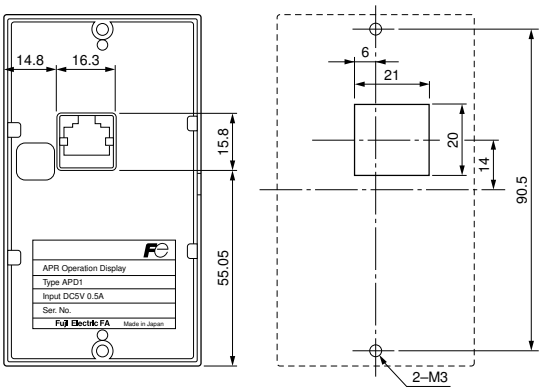

Panel cutting dimensions (view A)

■ Part names and functions of setting and display module

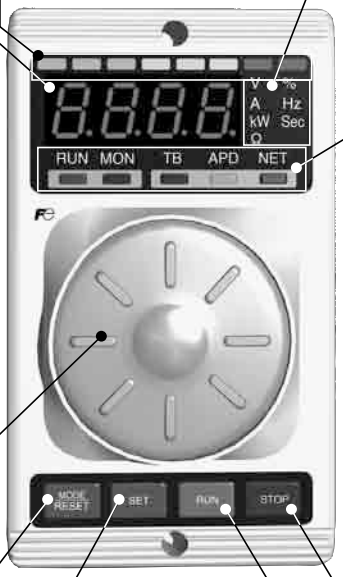

Multi-indicator

Display values are shown in eight segments on the LED monitor.
The indicators also display internal I/O monitors and communications monitors.

LED monitor

The monitor is a 7-segment LED display.
The following items are displayed according to the operation.

- Monitor mode
  Operation data (e.g., output voltage, output current, and load resistance values) is displayed.
  The alarm code is displayed if an alarm occurs.
- Setting mode
  Function codes and function code data are displayed.

Dial

The dial is used to select setting items and detection values displayed on the LED monitor and to change function code data.

MODE/RESET key

This key is used to switch between operation mode, monitor mode, and setting mode.

- Monitor mode
  Press this key to switch to setting mode.
- Setting mode
  Press this key to switch to monitor mode.

SET key

In setting mode, press this key to display function code data or enter data.

Unit display LEDs (seven)

LEDs display the unit for data displayed on the LED monitor.

- V ····· Voltage value display
- A ····· Current value display
- kW ····· Power value display
- Ω ····· Resistance value display
- % ····· Percentage display
- Hz ····· Frequency display
- Sec ····· Setting time display

Status display LEDs (five)

LEDs display the status.

- RUN-LED (operation display)
  This LED is lit when the APR is operation status.
- MON-LED (detection display)
  This LED is lit in monitor mode.
- TB-LED (terminal block display)
  This LED is lit when APR operation is performed according to a command from the terminal block.
- APD-LED (setting and display module display)
  This LED is lit when APR operation is performed according to the setting of the terminal block.
- NET-LED (network communications display)
  This LED is lit when APR operation is performed using a command from the host via network communications.

STOP key

This key is used to stop APR operation.

RUN key

This key is used to start APR operation.

MSA CONTROL - (11) 3961-1171 - comercial@msacontrol.com.br

■ Display and key operation

Display section and operation section \ Operation mode			Setting mode		Monitor mode	
			Operation stopped	Operating	Operation stopped	Operating
Display section		Function	Displays operation data outputs for fixed display of multi-indicator.		Displays in 8 segments for operation data, internal I/O, and communications monitors.	
		Display	ON/flashing			
		Function	Displays function codes and function code data. Displays alarm code at alarm.		Displays output voltage, output current, output power, load resistance value, and output %. Displays alarm code at alarm.	
		Display	ON			
		Function	Displays the status.			
		Display	• RUN-LED OFF	• RUN-LED ON	• RUN-LED OFF	• RUN-LED ON
			• MON-LED OFF		• MON-LED ON	
			• TB-LED ON when APR is selected at setting device.			
			• APD-LED ON when APD is selected at setting device.			
			• NET-LED ON when NET is selected at setting device.			
		Function	Displays unit for data displayed on LED monitor.			
		Display	• V-LED Voltage display			
			• A-LED Current display			
			• kW-LED Power display			
			• Ω-LED Resistance value display			
			• %-LED Percentage display			
			• Hz-LED Frequency display			
			• Sec-LED Setting time display			
Operation section		Function	Increases and decreases function codes and function code data.		Switches display mode of operation data.	
		Function	Moves to monitor mode		Moves to setting mode	
					Resets error after removing cause of error.	
		Function	Displays function code data and entering data.		–	
		Function	Starting operation	–	Starting operation	–
		Function	–	Operation stopped	–	Operation stopped

10

Single-phase AC power regulators, APR-α series

■ Description

The APR-α series is a compact, light-weight single-phase AC power regulator.
They have a wide variety of applications in such as resistive load, inductive load and transformer primary circuits.

■ Features

- Compact and light-weight product required only a small panel mounting space.
- Variety of models with output current ratings from 10 to 200A are available. Select optimum models for your applications.
- Fan error protection features are provided for 150 and 200A models.
- Overcurrent protection and low input voltage protection features are provided for the APR-α C series.

APR-α series

- The APR-α C series has LED indicators for overcurrent and fan error alarms and for load current and control power indications.

■ Types and ratings

Series	Input voltage	Output current	Type
APR-αA series	100V/200V common	10A 20A 30A 60A	**RPAE2010** **RPAE2020** **RPAE2030** **RPAE2060**
APR-αB series	100V/200V common	20A 40A 60A 100A	**RPBE2020-□** **RPBE2040-□** **RPBE2060-□** **RPBE2100-□**
	200V	150A 200A	**RPBE2150-□** **RPBE2200-□**
APR-αC series	100V/200V common	20A 40A 60A 100A	**RPCE2020-□** **RPCE2040-□** **RPCE2060-□** **RPCE2100-□**
	200V	150A 200A	**RPCE2150-□** **RPCE2200-□**

Note: Replace the □ mark by the parameter setting code shown in the Table.

● Parameter setting type code For APR-αB and αC series

Code	Parameter setting type
N	Current signal: 4 to 20mA DC Voltage signal: 1 to 5V DC
A	Variable resistor
B	Two-point control
C	Code N + gradient setting
E	Code A or C switchable
F	Code A or N switchable
Z	Non-standard current and voltage signals (custom spec.)

■ Output voltage characteristics for resistive load (Sample data)

αA series

- RPAE2010, RPAE2020, RPAE2030

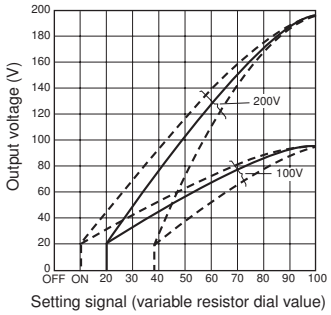

- RPAE2060

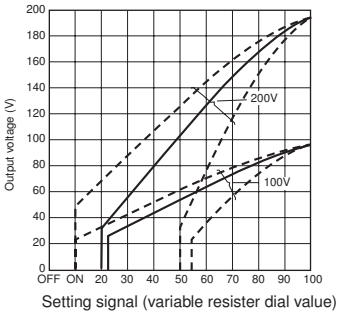

Note • Output characteristics are variable at input voltage and input frequency.
• Solid line shows sample data.
• Dotted line shows variable area.

αB series

- Variable resistor setting

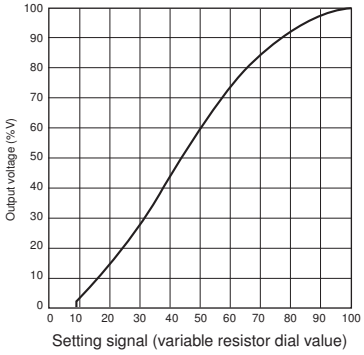

- Current signal setting
- Voltage signal setting

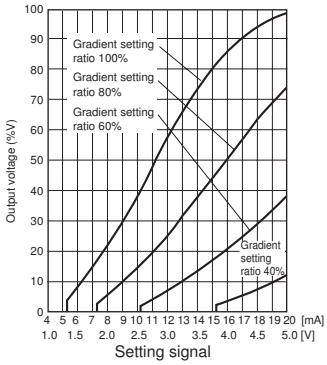

αC series

• Variable resistor setting

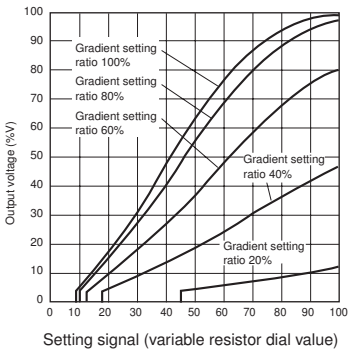

• Current signal setting
• Voltage signal setting

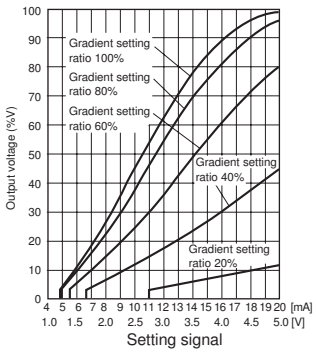

■ Specifications

Series		αA series		αB series	αC series
Type		**RPAE2□**		**RPBE2□-□**	**RPCE2□-□**
Applicable load		Resistive load		Resistive load	Resistive load, inductive load, transformer primary circuit, rectifier primary circuit
Rated output current		10A, 20A, 30A	60A	20A, 40A, 60A, 100A, 150A, 200A	
Minimum load current		0.8A (at 100V) 0.3A (at 200V)	0.3A	0.5A (at 98% output)	
Input voltage and frequency		100 to 110V AC, 200 to 220V AC ±10% 50/60Hz ±1Hz		Up to 100A: 100 to 110V AC/200 to 220V AC ±10%, 50/60Hz ±1Hz 150, 200A: 200 to 220V AC ±10%, 50/60Hz ±1Hz	
Minimum input voltage		–		10V AC	
Cooling		Self-cooled		Up to 100A: Self-cooled 150, 200A: Fan-cooled	
Wave control		Phase control			
Output voltage adjustment range		20 to 96% (100V) 10 to 98% (200V)	25 to 96% (100V) 25 to 98% (200V)	0 to 98% of input voltage	
Gradient setting range		–		0 to 100% of setting signal	
Output voltage setting		Variable resistor		Variable resistor Current signal: 4 to 20mA DC (Zin=250Ω) Voltage signal: 1 to 5V DC	
Time to soft-startup, soft-increase/decrease		–		1 second	
Protection	Short-circuit	Detected by super rapid fuse (externally mounted)			
	Overcurrent	–		–	Gate-off by built-in CT
	Fan-trouble	–		Gate-off by built-in sensor	
	Input voltage drop (control circuit)	–		–	Gate-off at voltage less than 15% of input voltage Reset at 15% or more of input voltage
Indication	Overcurrent/ fan trouble	–			Red LED lights up
	Load current	–			Yellow LED lights up
	Control supply	–			Green LED lights up
Ambient temperature		-15 to +55˚C*		-10 to +55˚C*	
Ambient humidity		30 to 90% RH (no condensation)			
Environment		Free from corrosive gases, dust and vibration			
Withstand voltage		2000V AC 1 minute between input and ground terminals (Variable resistor: 1000V AC 1 minute)			
Insulation resistance		20MΩ or more between input and ground terminals (500V DC megger)			

Note: * Output current should be derated when use above 40˚C

■ Type number nomenclature

RPB E 2 □ – □

Series
RPA: APR-αA series
RPB: APR-αB series
RPC: APR-αC series

Phase
E: Single-phase

Main circuit input voltage
2: 100-110V/200-220V AC common

Rated output current
010: 10A
020: 20A
030: 30A
040: 40A
060: 60A
100: 100A
150: 150A
200: 200A

Parameter setting
N: Current signal: 4 to 20mA DC, voltage signal: 1 to 5V DC
A: Variable resistor
B: Two-point control (high-low)
C: Code N + gradient setting
E: Code of A or C (switchable)
F: Code of A or N (switchable)
Z: Non-standard current and voltage signals

■ Ordering information

Specify the following:
1. Type number
2. Special specification

■ Dimensions, mm

● APR-αA series

RPAE2010

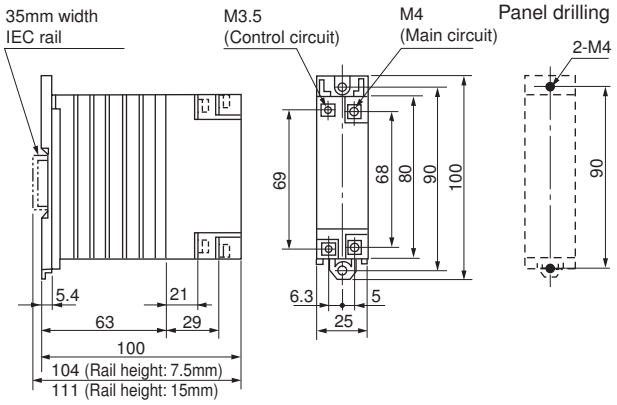

Mass : 200g

RPAE2020

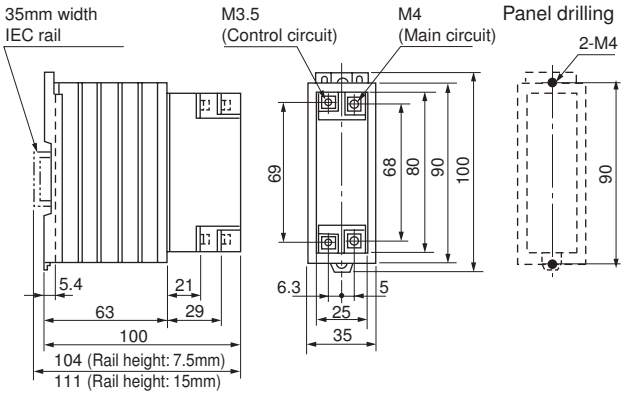

Mass : 230g

RPAE2030

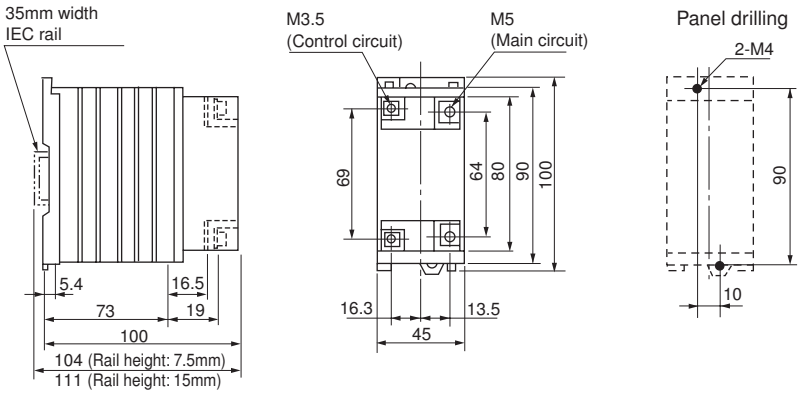

Mass : 330g

RPAE2060

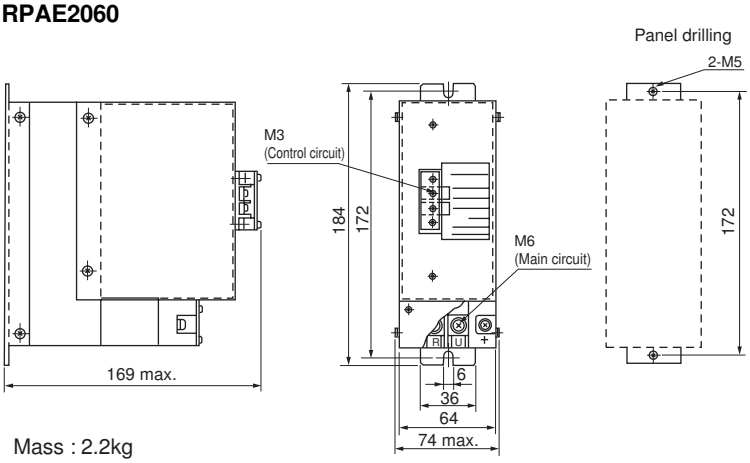

Mass : 2.2kg

■ Dimensions, mm

● APR-αB series

RPBE2020

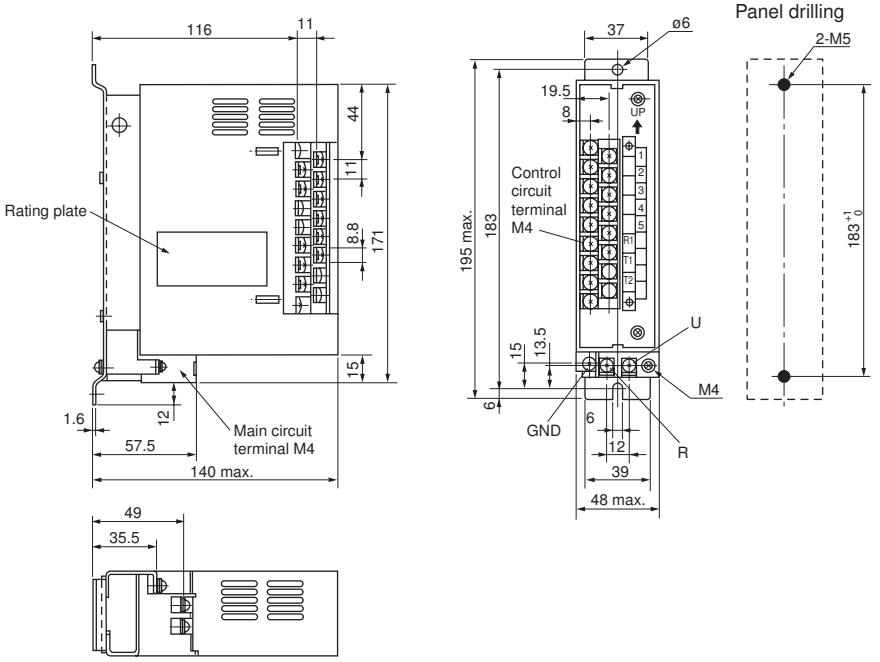

Mass : 1.1kg

RPBE2040, RPBE2060

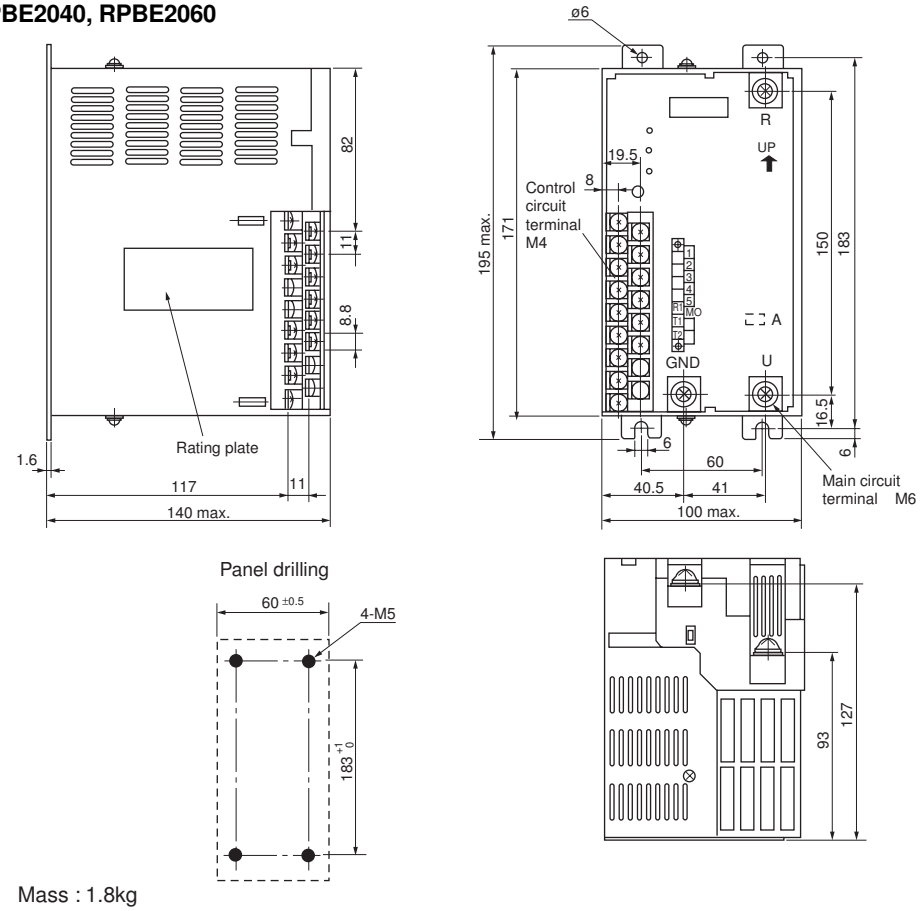

Mass : 1.8kg

■ **Dimensions, mm**
● **APR-αB series**

RPBE2100, RPBE2150, RPBE2200

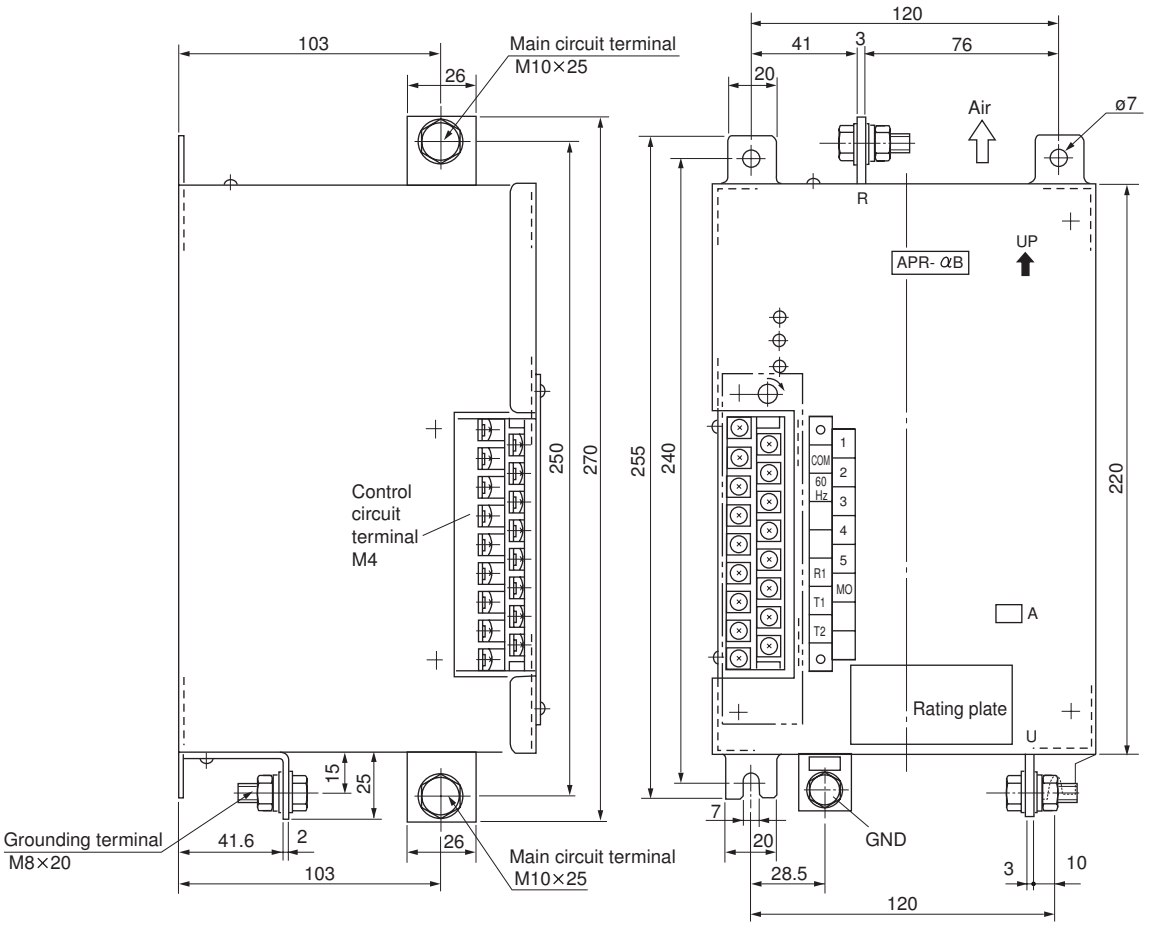

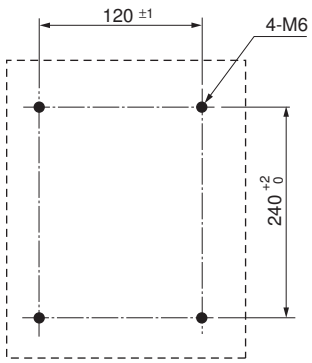

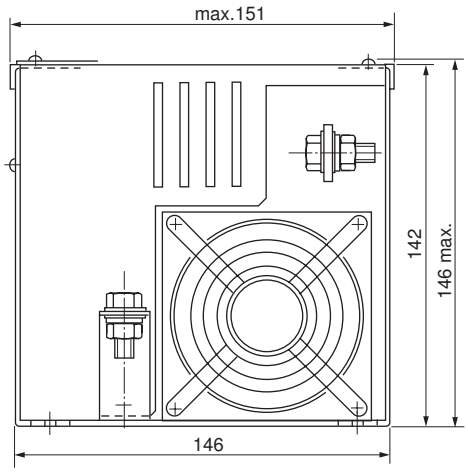

Mass
100A : 4.1 kg
150A, 200A : 4.5 kg

Note: No fan is provided with 100A types.

■ Dimensions, mm

● APR-αC series

RPCE2020, RPCE2040, RPCE2060

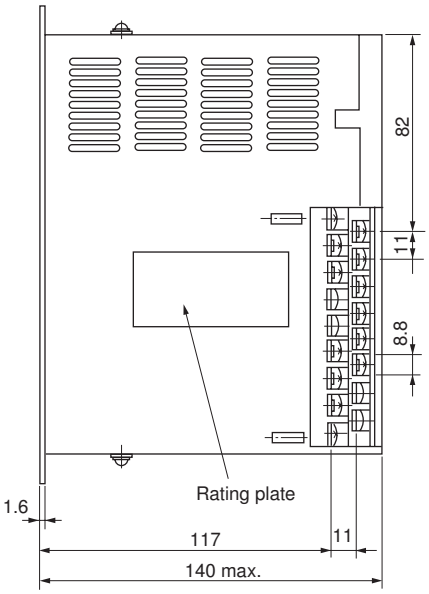

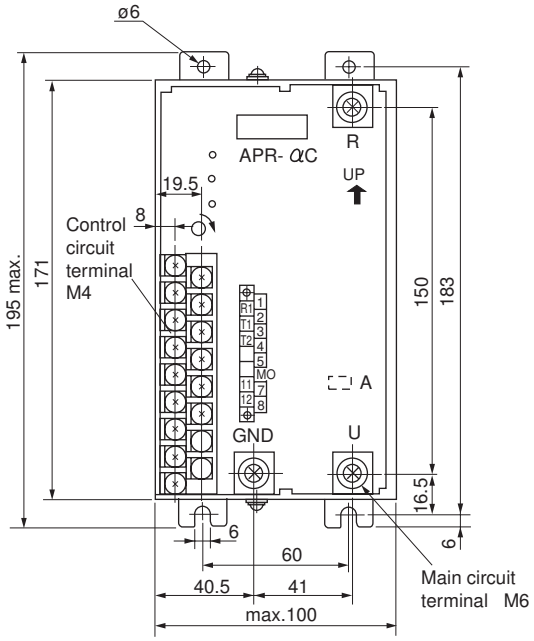

Panel drilling

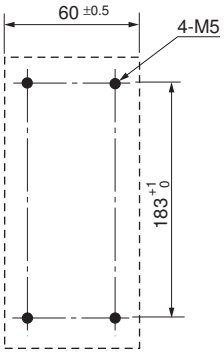

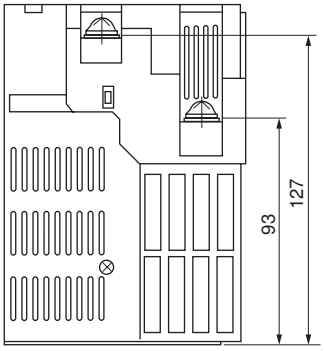

Mass : 2.2kg

■ **Dimensions, mm**
● **APR-αC series**

RPCE2100, RPCE2150, RPCE2200

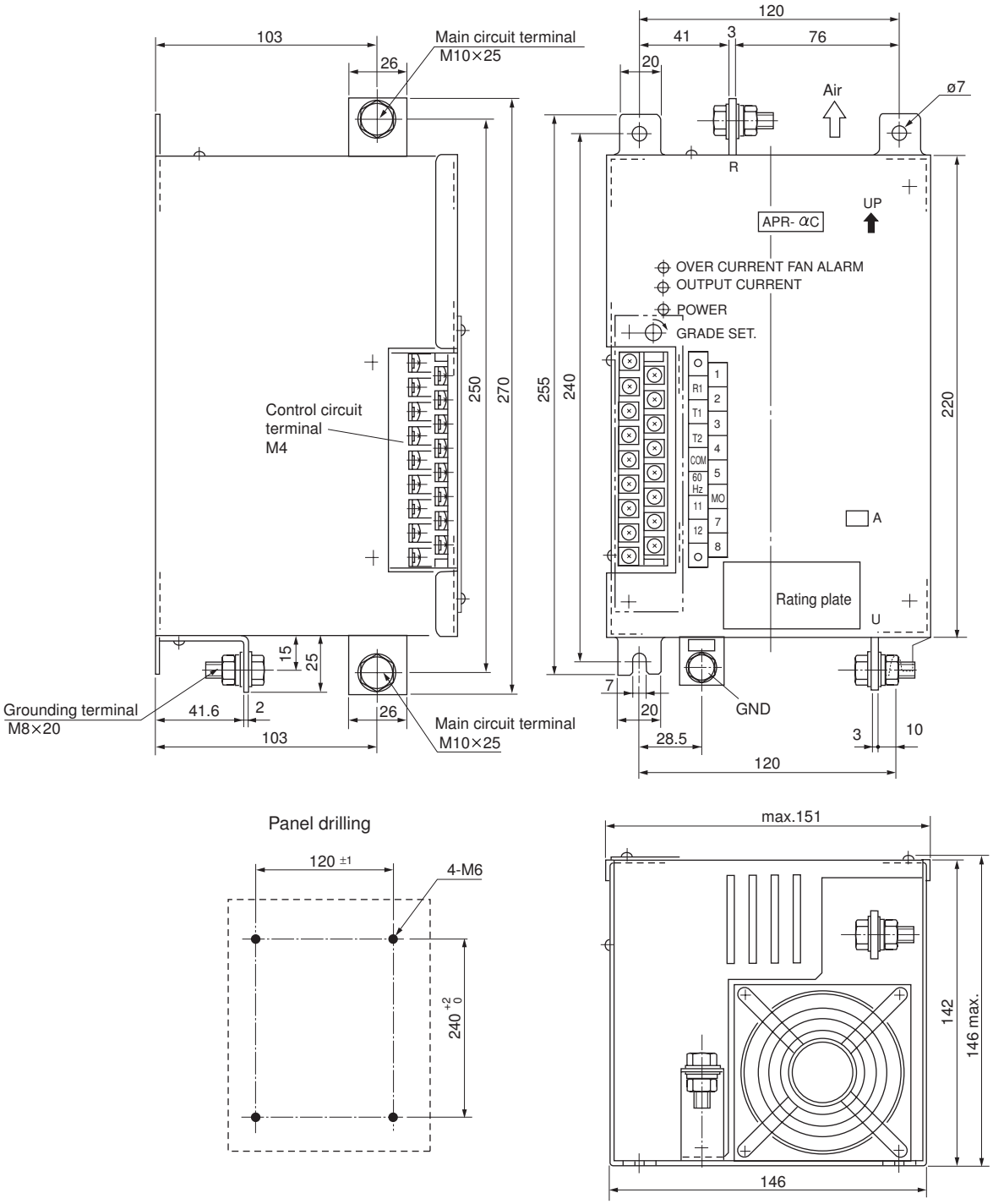

Mass:
100A : 4.5 kg
150A, 200A : 4.9 kg

Note: No fan is provided with 100A types.

Single and 3-phase AC power regulators PWM-APR series

■ Description

The PWM-APR series use IGBTs as switching elements and adopt FUJI's unique pulse-width moduration (PWM) system for power conversion, thus obtaining sinusoidal output voltages.

■ Features

● PWM power conversion system

FUJI's unique PWM system suppresses higher harmonics on both input and output circuits.
Sinusoidal output voltage is variable from 0 to 97% at single-phase and 0 to 95% at three-phase of the input voltage.
IGBTs used as switching elements realize high efficiency.

● Protection against output short-circuits

The protection feature detects output short-circuits and limits output current instantly.

● Applicable to many load types

Applicable to resistive, inductive, and capacitive loads.
Usable as low cost capacitor banks in place of power capacitors for power factor correction.
Conventional capacitor banks can only control lead currents stepwise. But, the PWM-APRs can vary lead currents continuously from zero to the maximum value.

RPWE RPWD

● No external higher-harmonics prevention measure required

The control system with a new main-circuit configuration and high-frequency switching outputs sinusoidal voltages to suppress higher harmonic currents.

■ Principle of operation

The PWM-APRs use the PWM system with the new main circuit configuration and high-frequency switching.
The PWM-APRs control output voltages to the specified level.
The output voltage waveform is made sinusoidal in order to suppress higher harmonics.

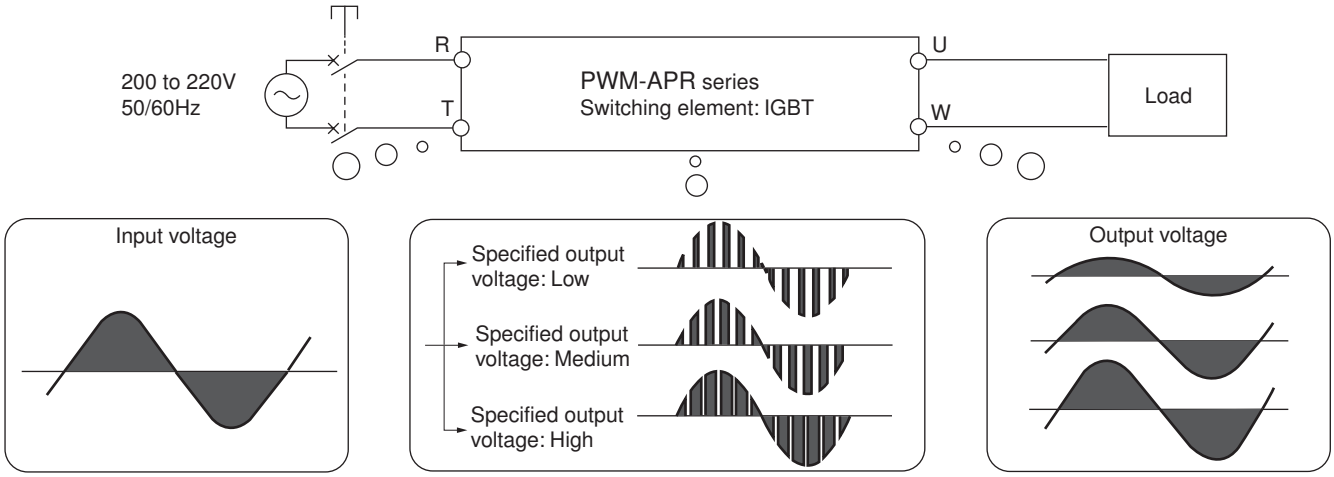

■ Types and specifications

Type		RPWE2080-1C□-N	RPWE2160-1C□-N	RPWD2040-1C□-N	RPWD2080-1C□-N	RPWD2160-1C□-N
Input	Voltage and frequency	Single-phase, 200 to 220V 50/60Hz		3-phase, 200 to 220V 50/60Hz		
	Allowable voltage and frequency fluctuation	Voltage: ±10% of input voltage Frequency: ±1Hz				
	Power required 200/220V	16/17.6kVA	32/35.2kVA	13.9/15.2kVA	27.7/30.5kVA	55.4/61.0kVA
Output current		80A	160A	40A	80A	160A
Cooling		Fan-cooled				
Applicable load		Resistive load, inductive load, transformer primary ciucuit (Contact FUJI for RPWD series), rectifier primary ciucuit and capacitive load				
Waveform control		PWM				
Output voltage adjustment range		0 to 97% of input voltage		0 to 95% of input voltage		
Output voltage setting		Variable resistor: 1kΩ, 2.5W Current signal: 4 to 20mA DC (Zin=250Ω) Voltage signal: 1 to 5V DC (Zin=1kΩ)				
Time to soft-startup, soft-increase/decrease		1 second				
Gradient setting		0 to 100% of setting signal				
Feedback control		AC AVR control + AC CLR control *				
Protection	Short-circuit	Detects short-circuits and limits output current instantly.				
	Overcurrent	AC CLR detects and limits overcurrent to the range below output rating.				
	Switching element overheat	Abnormal heat-sink temperature rise is detected in time to allow shutdown of APR operation. Operation resumes when temperature becomes normal.				
	Input voltage drop	Input voltage drop of 15% or more of rated voltage is detected in time to allow shutdown of APR operation. Operation resumes when the normal input voltage is recoverd.				
	IGBT abnormal	Abnormal IGBT status is detected in time to allow shutdown of APR operation.				
Environment		Altitude: Up to 1000m. Free from corrosive gases, dust, vibration				
Ambient temperature		0 to +55˚C (Output current shoud be derated when used above 40˚C)				
Humidity		30 to 90% RH (no condensation)				
Withstand voltage (main circuit)		2000V AC, 1 minute				
Insulation resistance (main circuit)		20MΩ or more (500V DC megger)				

Notes: * AVR: Constant voltage control CLR: Current limit control
• Replace the □ mark by the parameter setting type shown in the Table below.

● Parameter setting type code (□)

Code	Parameter setting type
N	Current signal: 4 to 20mA DC, voltage signal: 1 to 5V DC
A	Variable resistor
B	Two-point control
C	Code N + gradient setting
E	Code of A or C (switchable)
F	Code of A or N (switchable)
Z	Non-standard current and voltage signals (custom spec.)

MSA CONTROL - (11) 3961-1171 - comercial@msacontrol.com.br

■ Type number nomenclature

RPW □ 2 □ – 1 C □ – N

Series
PWM-APR series

Phase
E: Single-phase
D: 3-phase

Main circuit input voltage
2: 200 to 220V AC

Rated output current
040: 40A
080: 80A
160: 160A

Parameter setting
N: Current signal 4 to 20mA DC, Voltage signal: 1 to 5V DC
A: Variable resistor
B: Two-point control (high-low)
C: Code N + gradient setting
E: Code of A or C (switchable)
F: Code of A or N (switchable)
Z: Non-standard current and voltage signals

Control
C: AC AVR control + AC CLR control
AVR: Constant voltage control CLR: Current limit control

Circuit
1: No insulated deboost type

■ Ordering information

Specify the following:
1. Type number
2. Special specification

■ Dimensions, mm

● RPWE

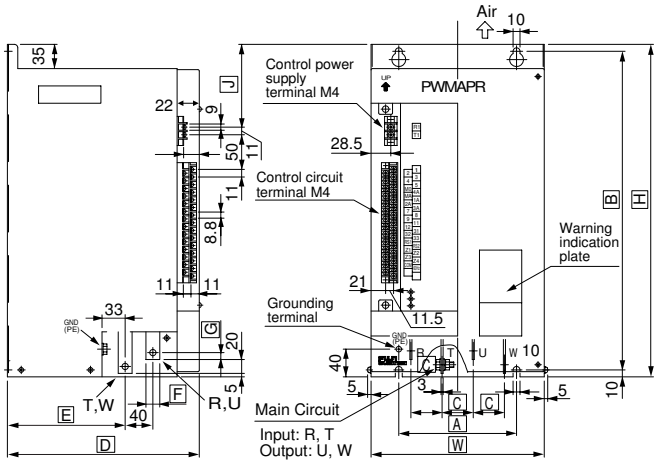

Single-phase 200 to 220V 50/60Hz 80A (Wall mounting)
Single-phase 200 to 220V 50/60Hz 160A (Wall mounting)

Terminal	80A	160A
Main circuit terminal	M8 20	M10 25
Grounding terminal	M8 14	M10 16

Rated output current	W	D	H	A	B	C	E	F	G	J	Mass
80A	250	277	480	170	460	45	170	20	10	120	25kg
160A	330	277	540	250	520	60	170	30	15	100	36kg

MSA CONTROL - (11) 3961-1171 - comercial@msacontrol.com.br

- **RPWD**

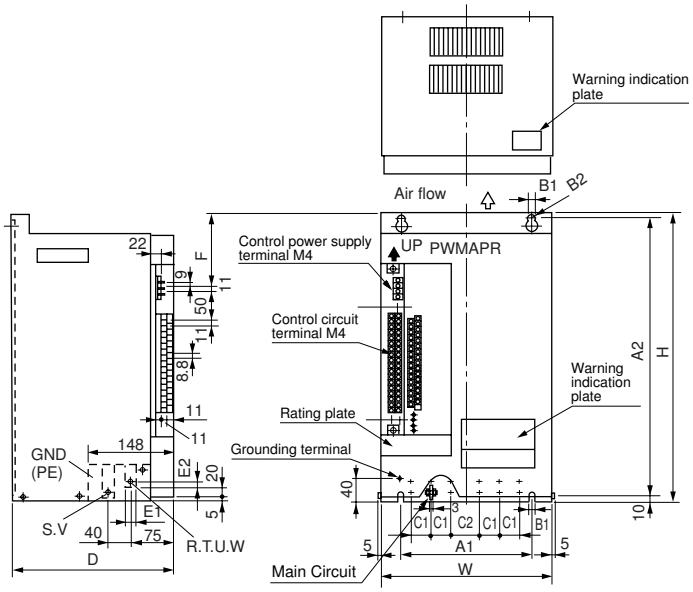

3-phase 200 to 220V 50/60Hz 40A (Wall mounting)
3-phase 200 to 220V 50/60Hz 80A (Wall mounting)
3-phase 200 to 220V 50/60Hz 160A (Wall mounting)

Terminal	40A	80A	160A
Main circuit terminal	M6×16	M8×20	M10×25
Grounding terminal	M6×12	M8×14	M10×16

Rated output current	W	H	D	A1	A2	B1	B2	C1	C2	E1	E2	F	Mass
40A	300	540	335	220	520	10	R5	35	50	20	10	140	35kg
80A	470	600	285	370	578	12	R6	60	90	20	10	165	55kg
160A	620	660	285	520	638	12	R6	75	120	30	15	165	75kg

3-phase AC power regulators, APR-L series

■ Description

The APR-L series is a compact, light-weight 3-phase AC power regulator.
It has various parameter setting types, and it is suitable for automatic control of heater and incandescent lighting.

■ Features

- Very compact and light-weight.
- Highly reliable and long lasting (Uses solid-state components.) Suitable for use in quiet places (Generates little audible noise.)
- 10 types of operation parameters enable flexible automatic control.

RPLD

■ Types and ratings

Input voltage	Output current	Type
3-phase 200V AC	20A	**RPLD2020-□**
	40A	**RPLD2040-□**
	60A	**RPLD2060-□**
	100A	**RPLD2100-□**
3-phase 400V AC	20A	**RPLD0020-□**
	40A	**RPLD0040-□**
	60A	**RPLD0060-□**
	100A	**RPLD0100-□**

Note: Replace the □ mark by the parameter setting code shown in the Table at the right.

● Parameter setting type code (□)

Code	Parameter setting type
N	Current signal: 4 to 20mA DC Voltage signal: 1 to 5V DC
A	Variable resistor
B	Two-point control
C	Code N + gradient setting
E	Code A or C (switchable)
F	Code A or N (switchable)
Z	Non-standard current and voltage signals (custom spec.)

■ Specifications

Input	Voltage and frequency	200 to 220V, 380V, 400 to 440V 50/60Hz (selectable)
	Allowable voltage and freuqnecy fluctuation	Voltage: ±10% of input voltage Freuquency: ±1Hz
Output voltage adjustable range		0 to 98% of input voltage
Gradient setting range		0 to 100% of setting signal
H-L control range		0 to 100%
Ambient temperature		-10 to +55˚C (Output current should be derated when used above 40˚C)
Applicable load		Resistive load
Output voltage setting		Variable resistor: 1kΩ Current signal: 4 to 20mA (250Ω) Voltage signal: 1 to 5V
Cooling		Self-cooled
Withstand voltage (between input and ground terminals)		200/220V: 2000V, 1 minute 380V, 400/440V: 2500V, 1 minute
Insulation resistance		5MΩ or more (500V DC megger)
Short-circuit protection		Super rapid fuse (external mounting)
Time to soft-startup and soft-increase/decrease		0.5 seconds

■ Voltage output characteristics for resistive load (typical)

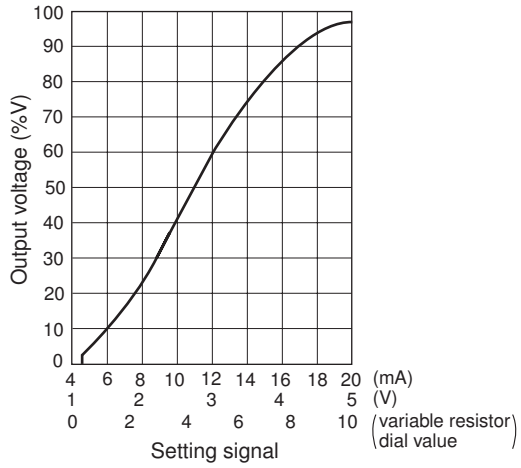

■ Ordering information

Specify the following:
1. Type number
2. Special specification

■ Type number nomenclature

RPL D □ □ – □

Series
APR-L series

Phase
D: 3-phase

Main circuit input voltage
2: 200V AC
0: 400V AC

Rated output current
020: 20A
040: 40A
060: 60A
100: 100A

Parameter setting
N: Current signal 4 to 20mA DC, Voltage signal: 1 to 5V DC
A: Variable resistor
B: Two-point control (high-low)
C: Code N + gradient setting
E: Code A or C switchable
F: Code A or N switchable
Z: Non-standard current and voltage signals

■ Dimensions, mm

● RPLD□020 (20A)

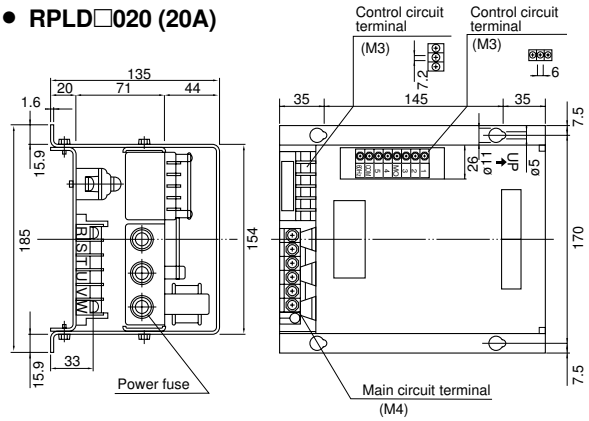

Mass: 3.4kg

● RPLD□040, 060 (40A, 60A)

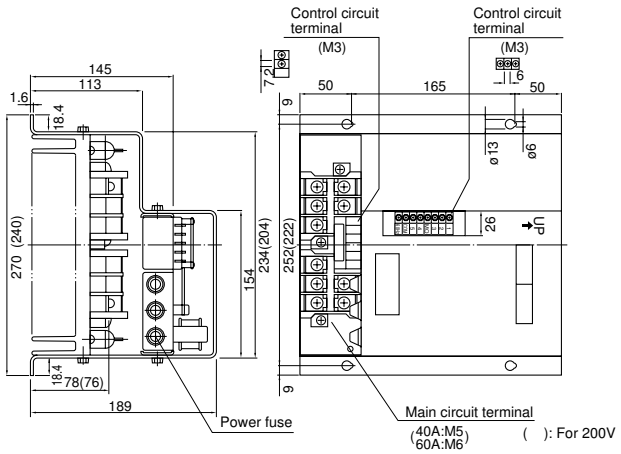

Mass: 200V 7.7kg, 400V 8.4kg

● RPLD□100 (100A)

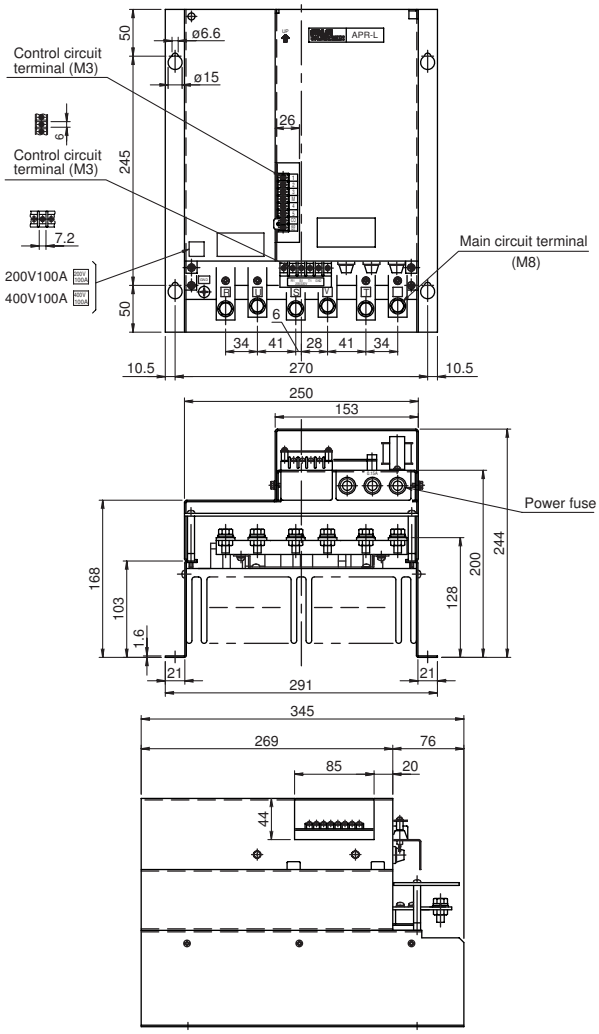

Mass: 11.5kg

■ Applications

The FUJI APRs use semiconductor devices as main-circuit switching elements to realize long life and high reliablity. As such, they are suitable for applications in which frequent load switching is required. Typical applications is high-precision control of heater temperature.

The FUJI APRs have no mechanical contacts. This means that the FUJI APRs do not generate noise when switching loads and they are suitable for use in quiet places or at night.

● Applications for heater control

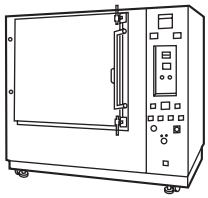

Constant temperature chamber

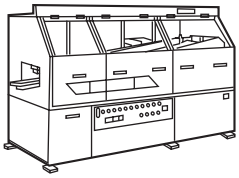

Soldering bath

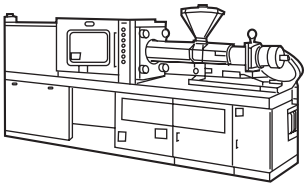

Plastic injection-mold machine

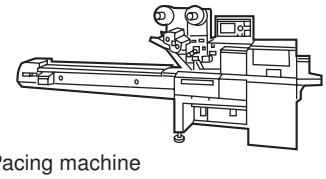

Pacing machine

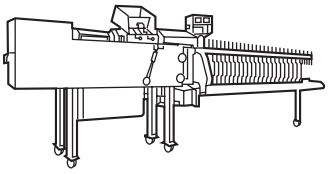

Filling machine

● Applications in quiet places

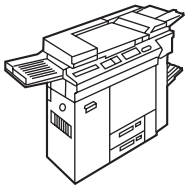

Copying machine

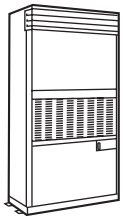

Air-condittioning equipment

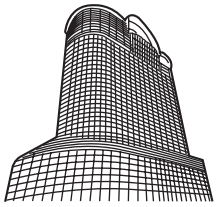

Swithchborad in a hotel

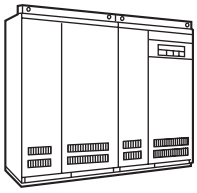

Power supply system for computers

Power supply system for hospital

Power Filters

■ Quick selection guide

Series	**RNFT□**	**RNFM□**	**RNFHA**	**RNFTS** **RNFMS**
				
Circuit	Input circuit	Input circuit	Input circuit	Output circuit
Phase	Single-phase, 3-phase	Single-phase, 3-phase	3-phase	3-phase
Rated voltage	250/480V	250/480V	200-250V, 380-440V	250/480V
Rated current	6-50A	60-1260A	5-100A	5-90A, 10-100A
Feature	• International safety standards • Resin case model with integrated terminal block construction • Simple wiring work	• International safety standards • Compact size and light weight	• High performance • Prevent noise emission from inverter output cables • Compact size and light weight	• Prevent noise emission from inverter output cables • Resin case model RNFTS series with integrated terminal block construction • Simple wiring work
Page	*10/34*	*10/34*	*10/43*	*10/47*

10

RNFT, RNFM series input circuit Power Filters

■ Features

- Design complies with international safety standards (UL1283, CSA C22.2 No.8, EN 60939-2).
- Wide-ranging product lineup supports APR. Single-phase/3-phase, 250/480V AC, 25 to 600A
- High-performance damping characteristics with damping circuit construction ideal for APR noise.
- Small leakage current minimizes ELCB (earth leakage circuit breaker) malfunctions.

■ Types and specifications

• Single-phase

Type	Rated voltage(V)	Rated current (A)	Withstand voltage (V) (between lines and ground)	Leakage current (mA)	Voltage drop (V)	Operating ambient temperature (˚C)
RNFT125-20	250	25	2000V AC, 1 minute	0.5 max.	1.0 max.	-10 to +50
RNFT150-20		50				
RNFM160-20		60		0.8 max.		
RNFM11H-20		100				
RNFM1H1-20		150		2.0 max.		
RNFM1H2-20		250				
RNFM1H3-20		350				
RNFM1H4-20		450		5.5 max.		
RNFM16H-20		600				
RNFT125-40	480	25	2500V AC, 1 minute	2.1 max.	1.0 max.	-10 to +50
RNFT150-40		50				
RNFM160-40		60		3.0 max.		
RNFM11H-40		100				
RNFM1H1-40		150		6.5 max.		
RNFM1H2-40		250				
RNFM1H3-40		350				
RNFM1H4-40		450		9.5 max.		
RNFM16H-40		600				

• 3-phase

Type	Rated voltage(V)	Rated current (A)	Withstand voltage (V) (between lines and ground)	Leakage current (mA)	Voltage drop (V)	Operating ambient temperature (˚C)
RNFTC06-20	250	6	2000V AC, 1 minute	1.0 max. with one phase grounded	1.0 max.	-10 to +50
RNFTC10-20		10				
RNFTC20-20		20				
RNFTC30-20		30				
RNFTC50-20		50				
RNFTC60-20		60		1.5 max. with one phase grounded		
RNFTC75-20		75				
RNFTC1H-20		100				
RNFTCH1-20		150		3.0 max. with one phase grounded		
RNFTC2H-20		200				
RNFTC3H-20		300				
RNFTC4H-20		400				
RNFTC5H-20		500		9.5 max. with one phase grounded		
RNFTC6H-20		600				
RNFTC06-40	480	6	2500V AC, 1 minute	• 1.0 max. with neutral phase grounded • 6.5 max. with one phase grounded	1.0 max.	-10 to +50
RNFTC10-40		10				
RNFTC20-40		20				
RNFTC30-40		30				
RNFTC50-40		50				
RNFTC75-40		75		• 1.0 max. with neutral phase grounded • 9.0 max. with one phase grounded		
RNFTC1H-40		100				
RNFTCH1-40		150		• 2.1 max. with neutral phase grounded • 19.0 max. with one phase grounded		
RNFTC2H-40		200				
RNFTC3H-40		300				
RNFTC4H-40		400				
RNFTC5H-40		500		9.9 max. with one phase grounded		
RNFTC6H-40		600				

■ Type number nomenclature

RNFT1 □□ – □□

Series
RNFT1: Single-phase, resin-case power filter
RNFM1: Single-phase, metal-case power filter
RNFTC: 3-phase, resin-case power filter
RNFMC: 3-phase, metal-case power filter

Rated voltage
20: 250V
40: 480V

Rated current

6: 6	H1: 150
10: 10	2H: 200
20: 20	H2: 250
25: 25	3H: 300
30: 30	H3: 350
50: 50	4H: 400
60: 60	H4: 450
75: 75	5H: 500
1H: 100	6H: 600

■ Dimensions, mm

No. of phases	Type		Case material	Dimensions (mm) Width	Length (with cover attached)	Depth	Main terminal screw size	Mass (kg)	Terminal cover
Single-phase	**RNFT125-20,40**		Resin	75	135 (190)	91	M5	1.0 max.	Optional FHF-2
	RNFT150-20,40			85	146 (200)	100	M5	1.6 max.	
	RNFM160-20,40	**RNFM11H-20,40**	Metal	121.5	233	99	M6	2.6 max.	Included with the terminal block as standard
	RNFM1H1-20,40			164	335	134	M8	3.2 max.	
	RNFM1H2-20,40			199	487	160	M10	10.0 max.	
	RNFM1H3-20,40			239	573	200	M12	15.0 max.	
	RNFM1H4-20,40	**RNFM16H-20,40**		239	573	200	M16	18.0 max.	
3-phase	**RNFTC06-20,40**		Resin	75	135 (190)	91	M5	1.0 max.	Optional FHF-2
	RNFTC10-20,40	**RNFTC20-20,40**							
	RNFTC25-40			85	146 (200)	100	M5	1.6 max.	
	RNFTC30-20,40	**RNFTC30-20,40**							
	RNFTC60-20	**RNFMC75-20,40**	Metal	127	255	109	M6	2.0	Included with the terminal block as standard
	RNFMC1H-20,40			142	270	120	M8	2.6	
	RNFMCH1-20,40			164	335	134	M8	4.1	
	RNFMC2H-20,40			179	385	157	M10	6.5	
	RNFMC3H-20,40			199	487	160	M10	11.0	
	RNFMC4H-20,40			239	573	200	M12	19.5	
	RNFMC5H-20,40			260	650	210	M16	21.0 max.	
	RNFMC6H-20,40								

RNFTC series input circuit Power Filters

■ Features

- Compliance with international safety standards (UL 1283, CSA C22.2 No. 8, EN 60939-2).
- Resin case model with integrated terminal block construction.
- External terminal construction equivalent to field-wiring terminal in durability.
- Identical terminal configuration with FUJI's MCCB, thus simplifying wiring work.
- Small leakage current minimizes ELCB (Earth Leakage Circuit Breaker) malfunctions.
- Combination with an RNFTS series output circuit Power Filter provides high damping characteristics.

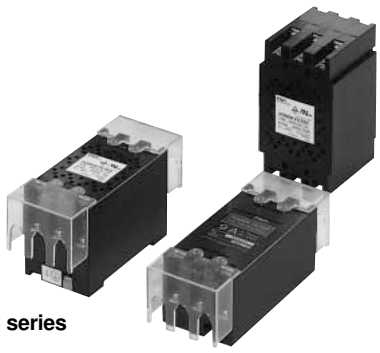

RNFTC series

■ Standards

c UL us	UL1283 CSA C22.2, No.8	File No. E210696
TÜV Rheinland	EN60939-2	R50023040, R50023039

■ Types and specifications

Type	Phase	Rated voltage(V)	Rated current (A)	Withstand voltage to grounding (V AC)	Leakage current (mA)	Voltage drop (V)	Operating ambient temperature (˚C)
RNFTC06-20	3-phase	250	6	2000, 1 minute	1.0 max. at one phase grounded	1.0 max.	-10 to +50
RNFTC10-20			10				
RNFTC20-20			20				
RNFTC30-20			30				
RNFTC50-20			50				
RNFTC06-40	3-phase	480	6	2500, 1 minute	• 1.0 max. at neutral phase grounded • 1.0 max. at one phase grounded	1.0 max.	-10 to +50
RNFTC10-40			10				
RNFTC20-40			20				
RNFTC30-40			30				
RNFTC50-40			50				

■ Type number nomenclature

RNFTC □ – □

Series
RNFTC series

Rated current
06: 6A
10: 10A
20: 20A
30: 30A
50: 50A

Rated voltage
20: 250V
40: 480V

■ Ordering information

Specify the following:
1. Type number

■ Noise damping characteristics

● Dynamic characteristics

Typical example: FUJI inverter combining an RNFTC06-20 input circuit Power Filter and an RNFTS05-20 series output circuit Power Filter.

• RNFTC06-20 only

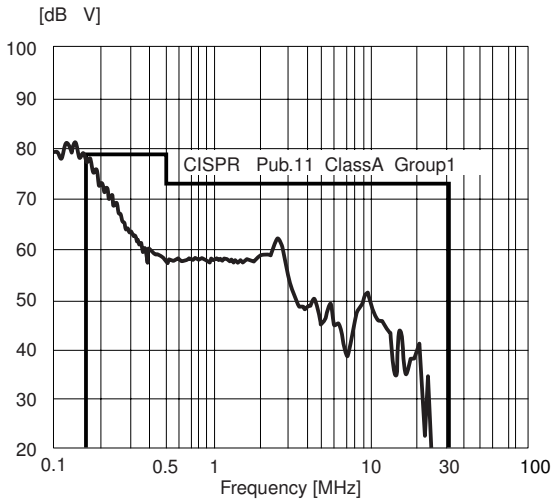

• RNFTC06-20 + RNFTS05-20

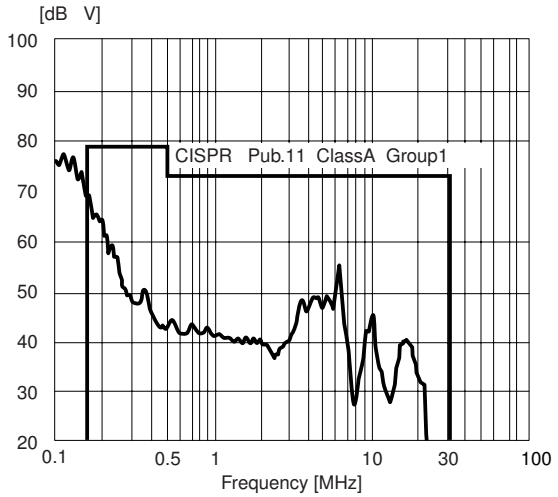

● Static characteristics

Typical example: RNFTC06-20

• Normal mode

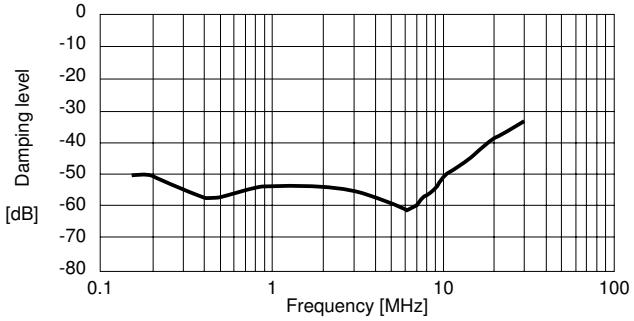

• Common mode

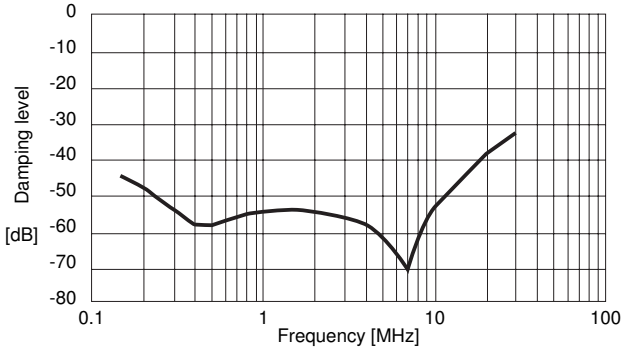

■ Dimensions, mm

RNFTC06-20, 06-40, 10-20, 10-40, 20-20, 20-40

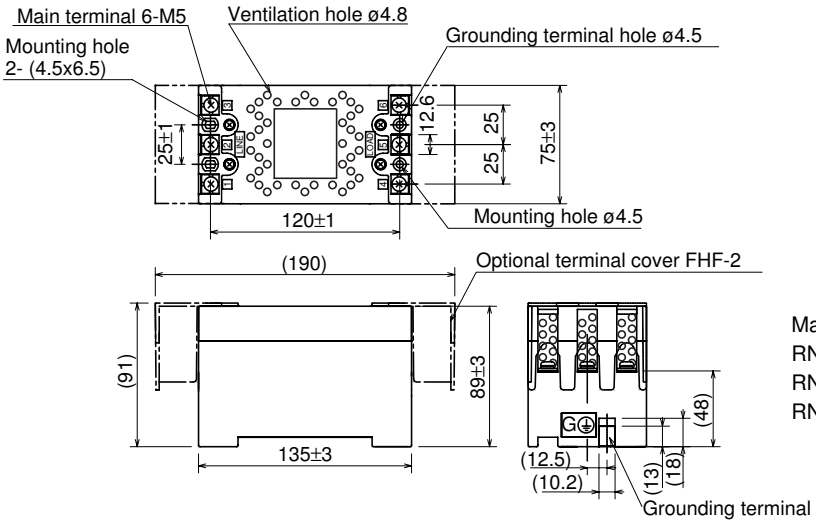

Mass:
RNFTC06-20, 10-20: 0.7kg
RNFTC20-20: 0.8kg
RNFTC06-40, 10-40, 20-40: 1.0kg

10

■ Dimensions, mm

RNFTC30-20, 30-40, 50-20, 50-40

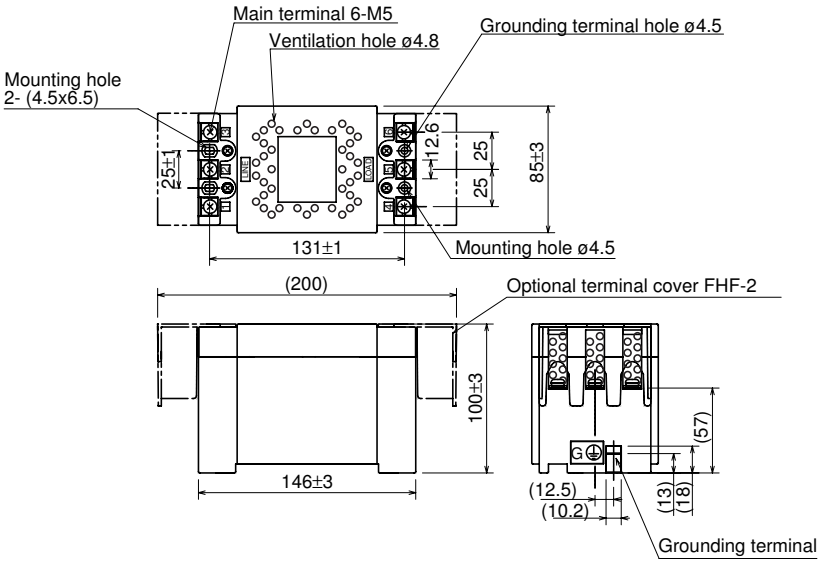

Mass:

RNFTC30-20: 1.0kg	RNFTC30-40: 1.4kg
RNFTC50-20: 1.1kg	RNFTC50-40: 1.6kg

RNFMC series input circuit Power Filters

RNFMC series

■ Features

- Compliance with international safety standards (UL 1283, CSA C22.2 No. 8, EN 60939-2), 75A and 100A types only.
- Types with rated current of 150A or more comply with international safety standards.
- External terminal construction equivalent to field-wiring terminal in durability.
- Compact size and light weight achieved with original FUJI technology.
- Small leakage current minimizes ELCB (Earth Leakage Circuit Breaker) malfunctions.
- Combination with an RNFTS or RNFMS series output circuit Power Filter provides high damping characteristics.

■ Standards

c UL us	UL1283 CSA C22.2, No.8	File No. E210696
TÜV Rheinland	EN60939-2	R50023040, R50023039

■ Types and specifications

Type	Phase	Rated voltage(V)	Rated current (A)	Withstand voltage to grounding (V AC)	Leakage current (mA)	Voltage drop (V)	Operating ambient temperature (˚C)
RNFMC75-20	3-phase	250	75	2000, 1 minute	1.5 max. at one phase grounded	1.0 max.	-10 to +50
RNFMC1H-20			100				
RNFMCH1-20			150		3 max. at one phase grounded		
RNFMC2H-20			200				
RNFMC3H-20			300				
RNFMC4H-20			400				
RNFMC5H-20			500		9.5 max. at one phase grounded		
RNFMC6H-20			600				
RNFMC75-40	3-phase	480	75	2500, 1 minute	• 1.0 max. at neutral phase grounded • 9.0 max. at one phase grounded	1.0 max.	-10 to +50
RNFMC1H-40			100				
RNFMCH1-40			150		• 2.1 max. at neutral phase grounded • 19.0 max. at one phase grounded		
RNFMC2H-40			200				
RNFMC3H-40			300				
RNFMC4H-40			400				
RNFMC5H-40			500		9.9 max. at neutral phase grounded		
RNFMC6H-40			600				
RNFMC9H-40			900				
RNFMC12H-40			1260				

■ Type number nomenclature

RNFMC □ – □

Series
RNFMC series

Rated current
75: 75A
1H: 100A
H1: 150A
2H: 200A
3H: 300A
4H: 400A
5H: 500A
6H: 600A
9H: 900A
12H: 1260A

Rated voltage
20: 250V
40: 480V

■ Ordering information

Specify the following:
1. Type number

10

■ Noise damping characteristics

● Dynamic characteristics

Typical example: FUJI inverter combining an RNFMC75-20 input circuit Power Filter and an RNFMS75-20 series output circuit Power Filter.

• RNFMC75-20 only

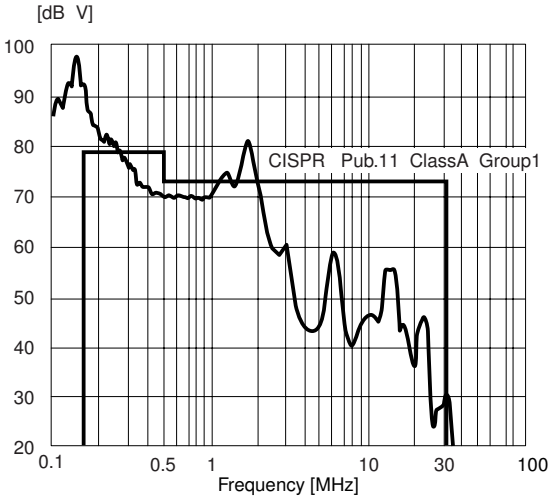

• RNFMC75-20 + RNFMS75-20

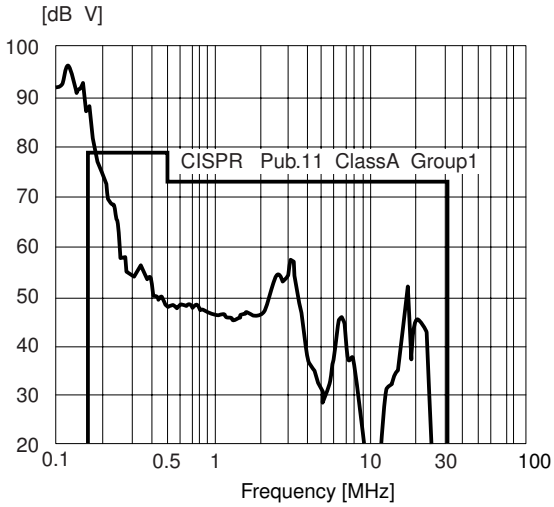

● Static characteristics

Typical example: RNFMC75-20

• Normal mode

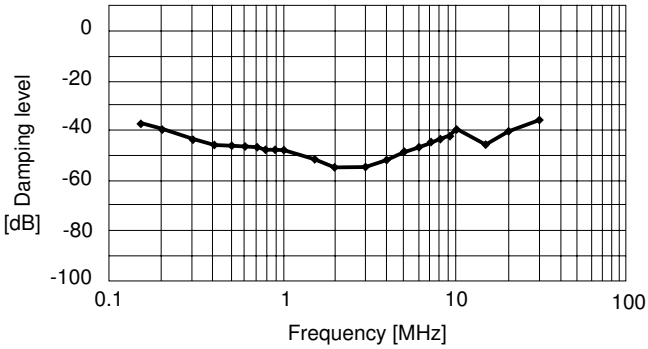

• Common mode

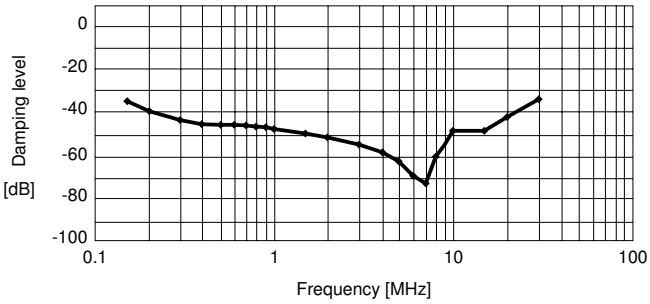

■ Dimensions, mm

RNFMC75-20, 40

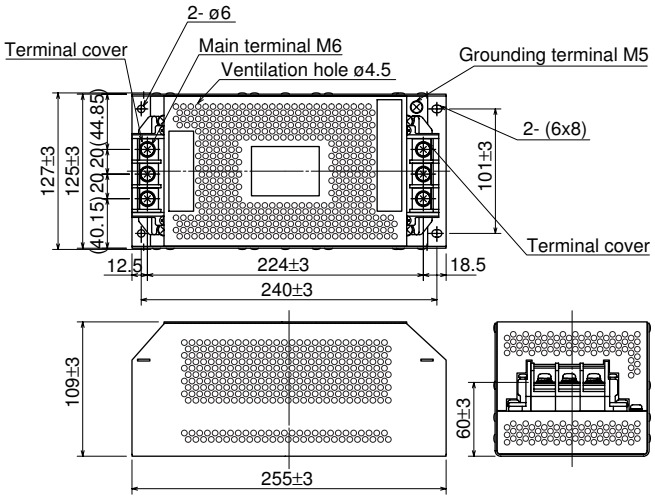

Mass: 2.0kg

RNFMC1H-20, 40

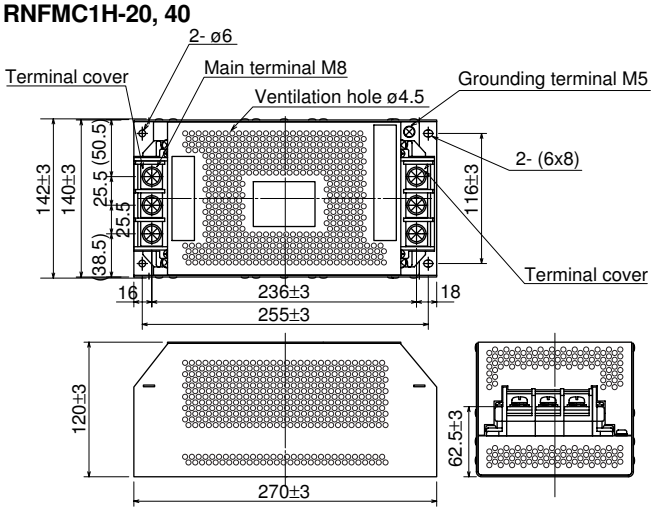

Mass: 2.6kg

■ Dimensions, mm

RNFMCH1-20, 40

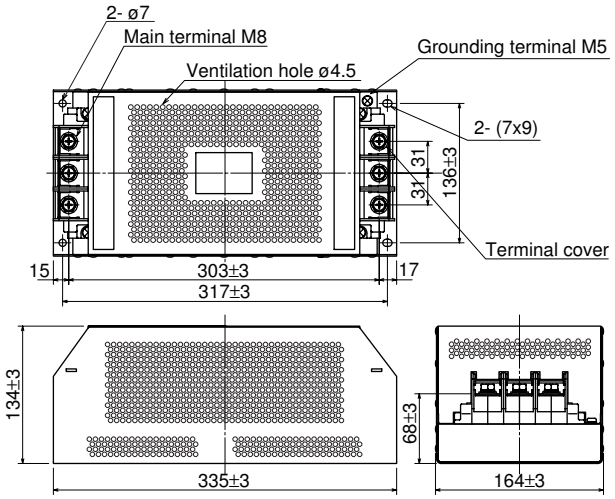

Mass: 4.1kg

RNFMC2H-20, 40

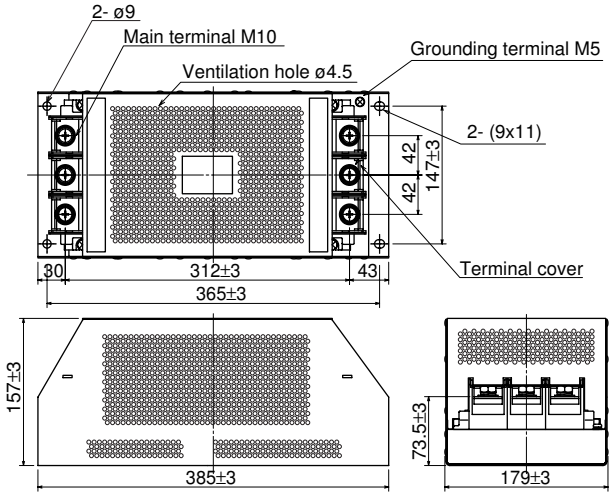

Mass: 6.5kg

RNFMC3H-20, 40

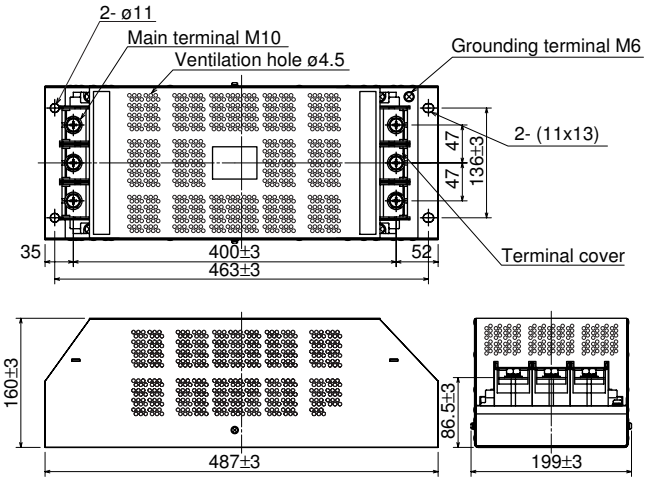

Mass: 11.0kg

RNFMC4H-20, 40

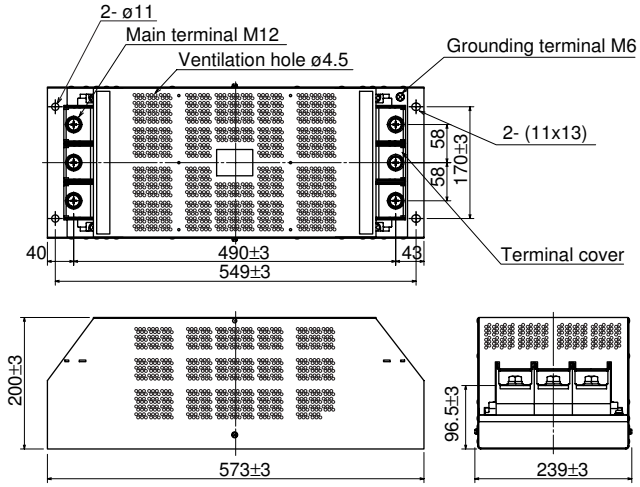

Mass: 19.5kg

■ Dimensions, mm

RNFMC5H, 6H-20, 40

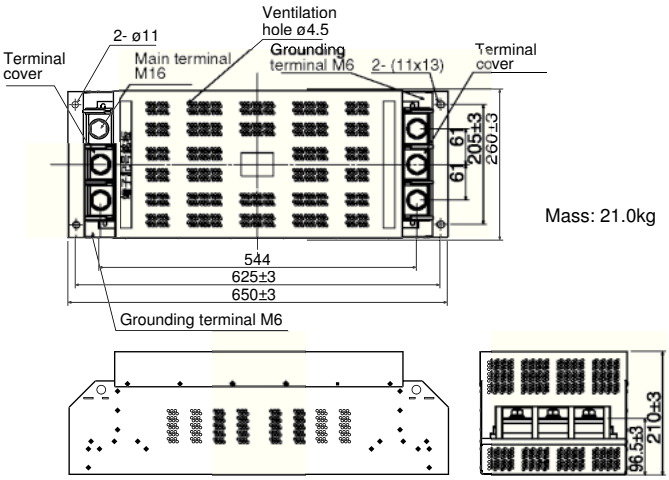

Mass: 21.0kg

RNFMC9H-40

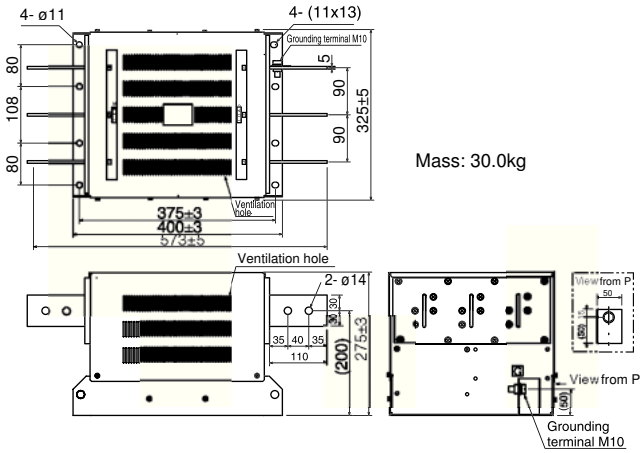

Mass: 30.0kg

RNFMC12H-40

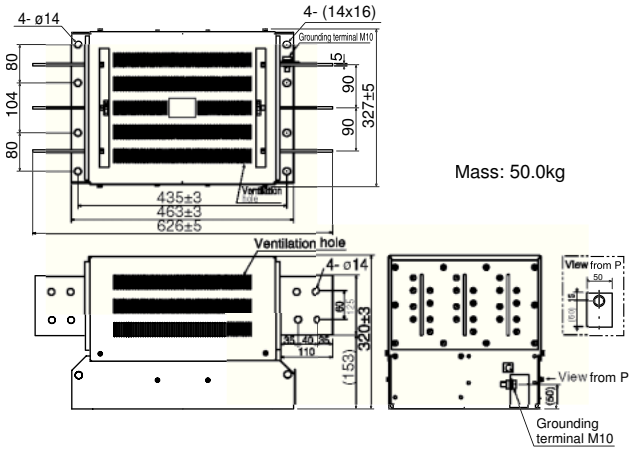

Mass: 50.0kg

RNFHA series input circuit Power Filters

■ Features

- Excellent noise-damping performance conforming to EMC Directive requirements (provided that certain installation conditions are satisfied).
- Reliable damping of noise generated from inverters. (Better noise damping-performance will be achieved by using the Power Filter in combination with the RNFTS or RNFMS-series Power Filter for the load line.)
- Compact size and light weight achieved with original FUJI technology.

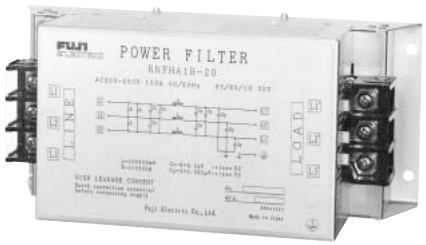

RNFHA series

■ Types and specifications

Type	Phase	Rated voltage (V)	Rated current (A)	Withstand voltage to grounding (V AC)	Leakage current (mA)	Voltage drop (V)	Operating ambient temperature (˚C)
RNFHA05-20 **RNFHA10-20** **RNFHA20-20** **RNFHA30-20** **RNFHA50-20** **RNFHA75-20** **RNFHA1H-20**	3-phase	200 to 250	5 10 20 30 50 75 100	2000, 1 minute	4.5 max. at one phase grounded	1.5 max.	–25 to +50
RNFHA05-40 **RNFHA10-40** **RNFHA20-40** **RNFHA30-40** **RNFHA50-40** **RNFHA75-40** **RNFHA1H-40**	3-phase	380 to 440	5 10 20 30 50 75 100	2000, 1 minute	• 3.5 max. at neutral phase grounded • 24 max. at one phase grounded	1.5 max.	–25 to +50

■ Type number nomenclature

RNFHA □ – □

Series
RNFHA series

Rated current
05: 5A
10: 10A
20: 20A
30: 30A
50: 50A
75: 75A
1H: 100A

Rated voltage
20: 200 to 250V
40: 380 to 440V

■ Ordering information

Specify the following:
1. Type number

10

■ Noise damping characteristics

● Dynamic characteristics

Typical example: FUJI inverter combining an RNFHA05-20 input circuit Power Filter and an RNFTS05-20 series output circuit Power Filter.

• RNFHA05-20 only

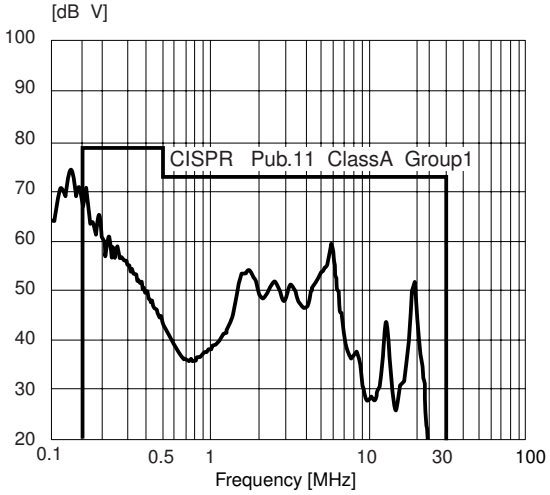

• RNFHA05-20 + RNFTS05-20

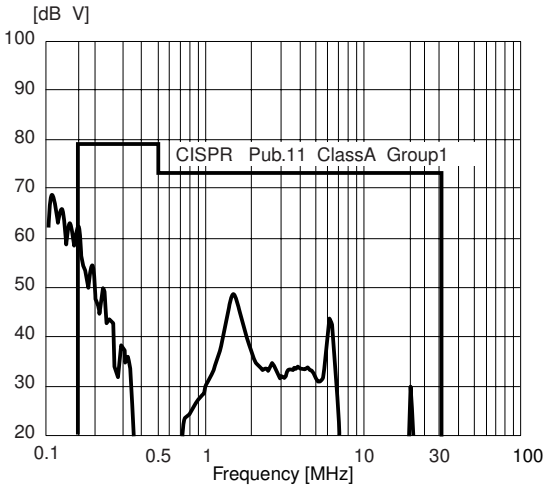

● Static characteristics

Typical example: RNFHA05-20

• Normal mode

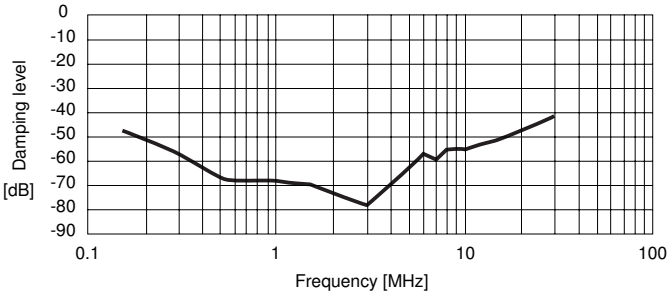

• Common mode

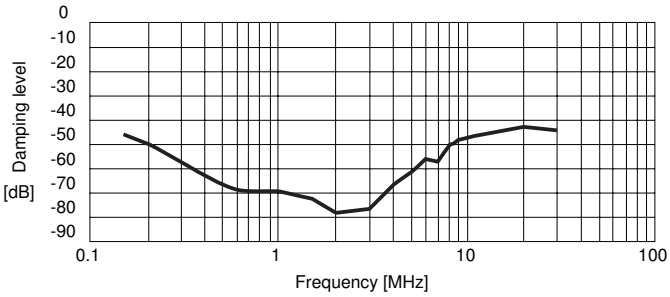

■ Dimensions, mm

RNFHA05-20
RNFHA05-40

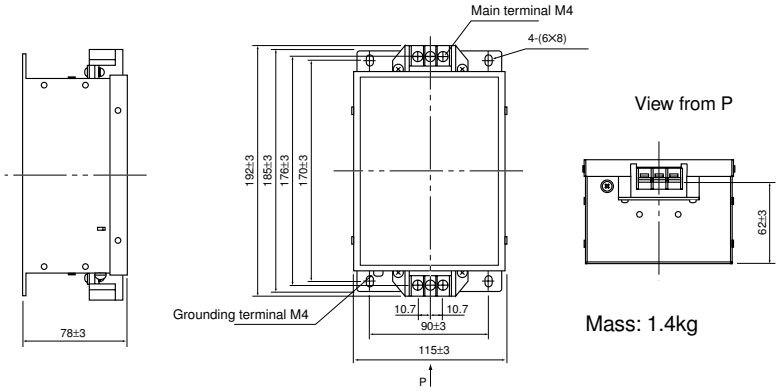

RNFHA10-20
RNFHA10-40

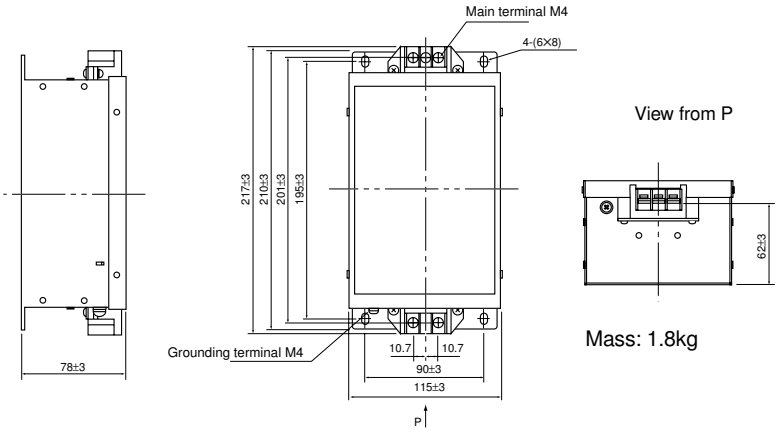

RNFHA20-20
RNFHA20-40

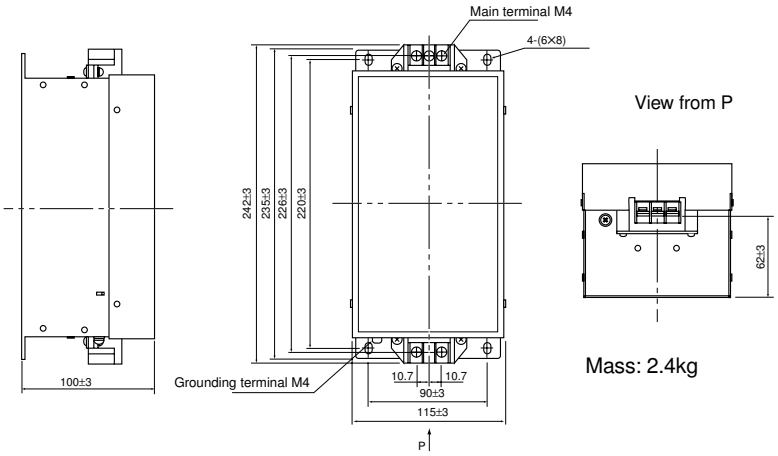

RNFHA30-20
RNFHA30-40

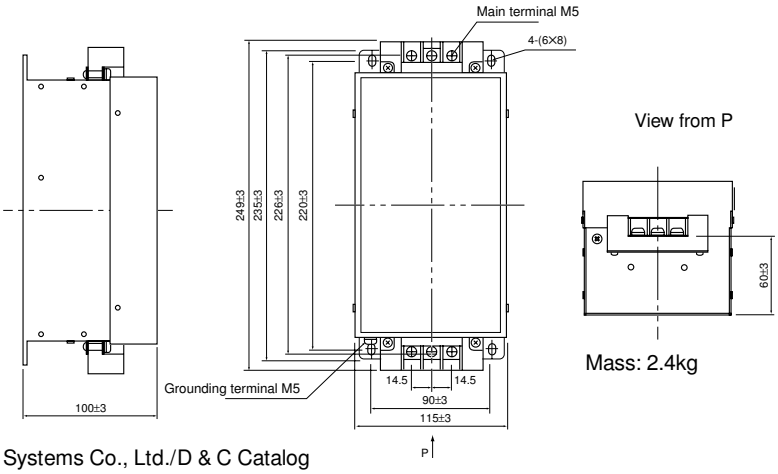

■ Dimensions, mm

RNFHA50-20
RNFHA50-40

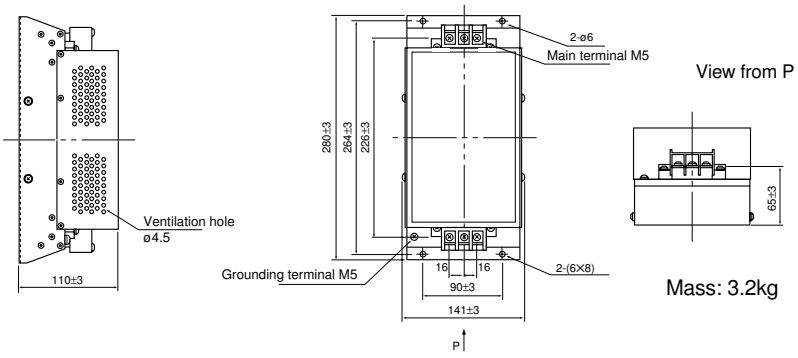

RNFHA75-20
RNFHA75-40

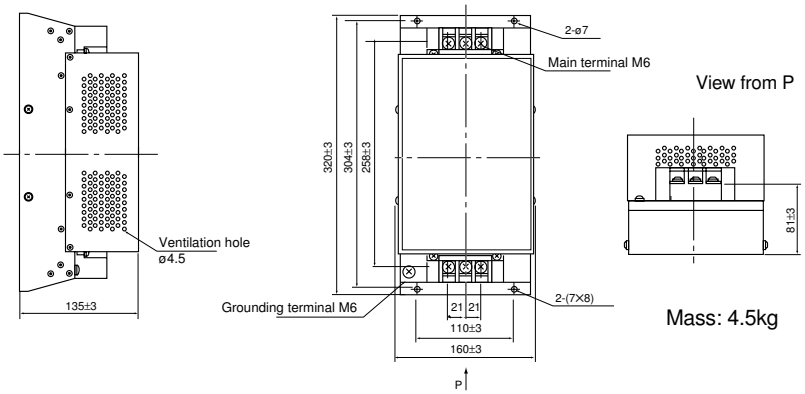

RNFHA1H-20
RNFHA1H-40

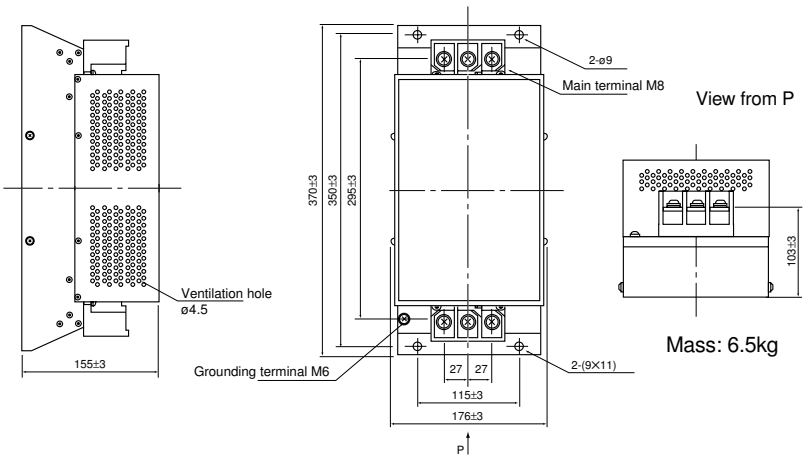

RNFTS and RNFMS series output circuit Power Filters

■ Features

- Prevent noise emission from inverter output cables.
- Combination with an RNFTC or RNFMC or RNFHA series input circuit power filter provides high damping characteristics.
- External terminal construction equivalent to field-wiring terminal in durability.
- For resin case model RNFTS series, identical terminal configuration with FUJI's MCCB, thus simplifying wiring work.

RNFTS, RNFMS series

■ Types and specifications

Type	Phase	Rated voltage(V)	Rated current (A)	Withstand voltage to grounding (V AC)	Voltage drop (V)	Operating ambient temperature (˚C)
RNFTS05-20	3-phase	250	5	2000, 1 minute	1.0 max.	-10 to +50
RNFTS10-20			10			
RNFTS20-20			20			
RNFTS30-20			30			
RNFTS50-20			50			
RNFMS60-20			60			
RNFMS75-20			75			
RNFMS90-20			90			
RNFTS10-40	3-phase	480	10	2500, 1 minute	1.0 max.	-10 to +50
RNFTS20-40			20			
RNFTS25-40			25			
RNFTS30-40			30			
RNFTS40-40			40			
RNFTS45-40			45			
RNFMS75-40			75			
RNFMS1H-40			100			

■ Type number nomenclature

RNFTS □ – □

Series
RNFTS series: Resin case model
RNFMS series: Metal case model

Rated current

5: 5A	45: 45A
10: 10A	50: 50A
20: 20A	60: 60A
25: 25A	75: 75A
30: 30A	90: 90A
40: 40A	1H: 100A

Rated voltage
20: 250V
40: 480V

■ Ordering information

Specify the following:
1. Type number

10

■ Dimensions, mm

RNFTS05-20, 10-20, 20-20, 10-40

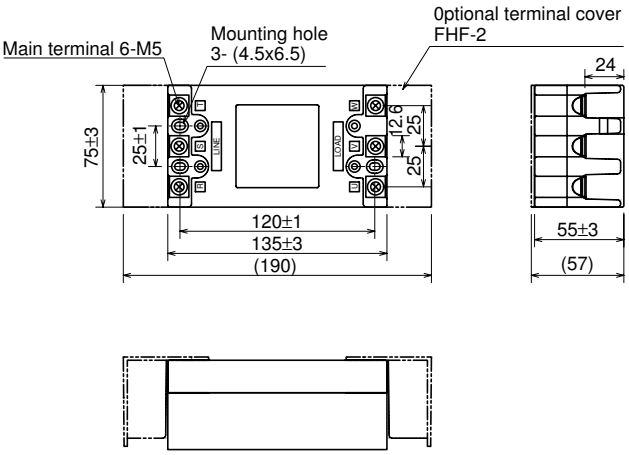

Mass:
RNFTS05-20, 10-20: 0.5kg
RNFTS20-20: 0.6kg
RNFTS10-40: 0.7kg

RNFTS30-20, 20-40

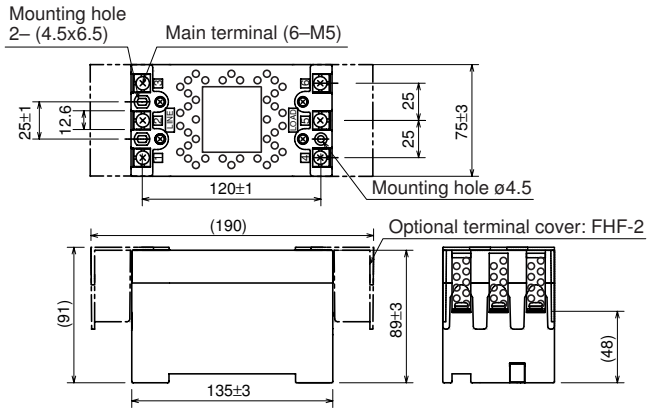

Mass:
RNFTS30-20: 0.8kg
RNFTS20-40: 1.0kg

RNFTS50-20, 25-40, 30-40, 40-40, 45-40

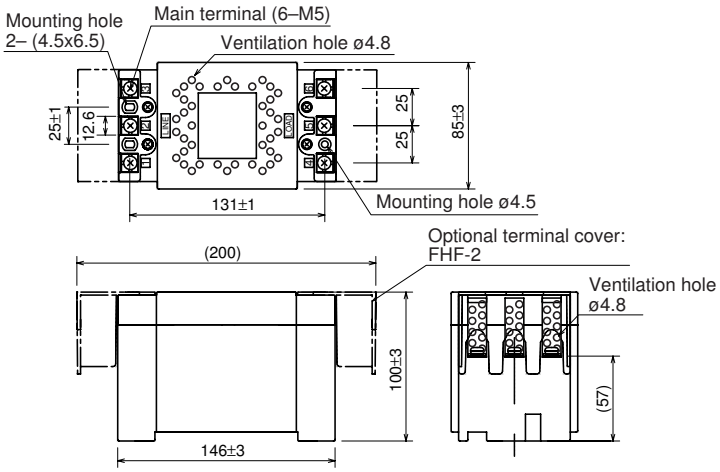

Mass:
RNFTS50-20: 1.6kg
RNFTS25-40, 30-40: 1.4kg
RNFTS40-40, 45-40: 1.6kg

RNFMS60-20, 75-20, 90-20, 75-40, 1H-40

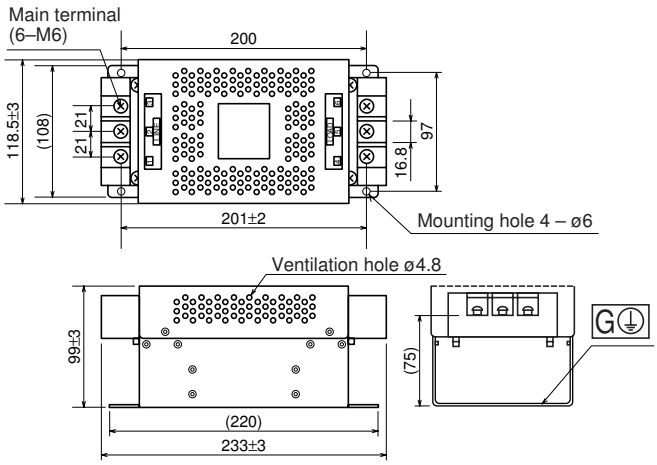

Mass:
RNFMS60-20, 75-20, 90-20: 2.2kg
RNFMS75-40, 1H-40: 2.6kg

■ Application to inverters/Standard types

Circuit voltage	Applicable inverter capacity (kW)	Input circuit Power Filter		Output circuit Power Filter
		With DC reactor	Without DC reactor	
3-phase 200V 50/60Hz	0.2	RNFTC06-20	RNFTC06-20	RNFTS05-20
	0.4			
	0.75		RNFTC10-20	
	1.5		RNFTC20-20	RNFTS10-20
	2.2	RNFTC10-20		RNFTS20-20
	3.7	RNFTC20-20	RNFTC30-20	
	5.5		RNFTC50-20	RNFTS30-20
	7.5	RNFTC30-20	RNFMC75-20	RNFTS50-20
	11	RNFTC50-20	RNFMC1H-20	
	15	RNFMC75-20		RNFMS60-20
	18.5		RNFMCH1-20	RNFMS75-20
	22	RNFMC1H-20		RNFMS90-20
	30	RNFMCH1-20	RNFMC2H-20	–
	37		RNFMC3H-20	
	45	RNFMC2H-20		
	55			
	75	RNFMC3H-20	–	
	90	RNFMC4H-20		
	110	–		
3-phase 400V 50/60Hz	0.4	RNFTC06-40	RNFTC06-40	RNFTS10-40
	0.75			
	1.5		RNFTC10-40	
	2.2			
	3.7	RNFTC10-40	RNFTC20-40	
	5.5		RNFTC30-40	RNFTS20-40
	7.5	RNFTC20-40		
	11		RNFTC50-40	RNFTS25-40
	15	RNFTC30-40	RNFMC75-40	RNFTS30-40
	18.5	RNFTC50-40		RNFTS40-40
	22			RNFTS45-40
	30	RNFMC75-40	RNFMC1H-40	RNFMS75-40
	37		RNFMCH1-40	
	45	RNFMC1H-40		RNFMS1H-40
	55			
	75	RNFMCH1-40	–	–
	90	RNFMC2H-40		
	110			
	132	RNFMC3H-40		
	160			
	200	RNFMC4H-40		
	220			
	280	RNFMC5H-40		
	315	RNFMC6H-40		
	355	RNFMC9H-40		
	400			
	450			
	500			
	630	RNFMC12H-40		
	730			

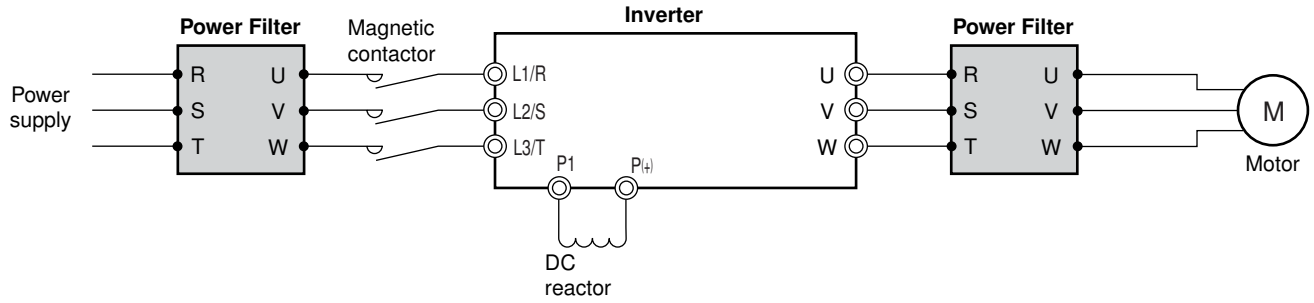

■ Application to inverters/High performance types

Circuit voltage	Applicable inverter capacity (kW)	Input circuit Power Filter		Output circuit Power Filter
		With DC reactor	Without DC reactor	
3-phase 200V 50/60Hz	0.2	RNFHA05-20	RNFHA05-20	RNFTS05-20
	0.4			
	0.75		RNFHA10-20	
	1.5	RNFHA10-20	RNFHA20-20	RNFTS10-20
	2.2			RNFTS20-20
	3.7	RNFHA20-20	RNFHA30-20	
	5.5		RNFHA50-20	RNFTS30-20
	7.5	RNFHA30-20	RNFHA75-20	RNFTS50-20
	11	RNFHA50-20	RNFHA1H-20	
	15	RNFHA75-20		RNFMS60-20
	18.5		–	RNFMS75-20
	22	RNFHA1H-20		RNFMS90-20
3-phase 400V 50/60Hz	0.4	RNFHA05-40	RNFHA05-40	RNFTS10-40
	0.75			
	1.5		RNFHA10-40	
	2.2			
	3.7	RNFHA10-40	RNFHA20-40	
	5.5		RNFHA30-40	RNFTS20-40
	7.5	RNFHA20-40		
	11		RNFHA50-40	RNFTS25-40
	15	RNFHA30-40	RNFHA75-40	RNFTS30-40
	18.5	RNFHA50-40		RNFTS40-40
	22			RNFTS45-40
	30	RNFHA75-40	RNFHA1H-40	RNFMS75-40
	37		–	
	45	RNFHA1H-40		RNFMS1H-40
	55			–

■ Applicable to servo systems/Input circuit standard types

Circuit voltage	FALDIC series servo amplifier			Power Filter
	Capacity (kW)	FALDIC-α	FALDIC-β	
3-phase 200V	0.05	RYS500S3	RYB500S3-VBC	**RNFTC06-20**
	0.1	RYS101S3	RYB101S3-VBC	
	0.2	RYS201S3	RYB201S3-VBC	
	0.4	RYS401S3	RYB401S3-VBC	**RNFTC10-20**
	0.75	RYS751S3	RYB751S3-VBC	**RNFTC20-20**
	1.0	RYS102S3	–	
	1.5	RYS152S3		
	2.0	RYS202S3		
	3.0	RYS302S3	–	**RNFTC30-20**
	4.0	RYS402S3	–	**RNFTC50-20**
	5.0	RYS502S3		
Single-phase 100V	0.05	RYS500S3	RYB500S3-VBC6	**RNFTC06-20**
	0.1	RYS101S3	RYB101S3-VBC6	
	0.2	RYS201S3	RYB201S3-VBC6	**RNFTC10-20**
	0.375	RYS371S3-VVX6	–	**RNFTC20-20**

Circuit voltage	Digital ES servo amplifier		Power Filter
	Capacity (kW)	RYE series	
3-phase 200V	0.05	RYE.05D	**RNFTC06-20**
	0.1	RYE.10D	
	0.2	RYE.20D	
	0.4	RYE.40D	
	0.75	RYE.75D	**RNFTC10-20**
	1.5	RYE1.5D	**RNFTC20-20**
	2.2	RYE2.2D	**RNFTC30-20**
	3.0	RYE3.0D	
	3.7	RYE3.7D	

■ **Applicable to servo systems/Input circuit high performance types**

Circuit voltage	FALDIC series servo amplifier			Power Filter
	Capacity (kW)	FALDIC-α	FALDIC-β	
3-phase 200V	0.05	RYS500S3	RYB500S3-VBC	**RNFHA05-20**
	0.1	RYS101S3	RYB101S3-VBC	
	0.2	RYS201S3	RYB201S3-VBC	
	0.4	RYS401S3	RYB401S3-VBC	**RNFHA10-20**
	0.75	RYS751S3	RYB751S3-VBC	**RNFHA20-20**
	1.0	RYS102S3	–	
	1.5	RYS152S3		
	2.0	RYS202S3		
	3.0	RYS302S3	–	**RNFHA30-20**
	4.0	RYS402S3	–	**RNFHA50-20**
	5.0	RYS502S3		
Single phase 100V	0.05	RYS500S3	RYB500S3-VBC6	**RNFHA05-20**
	0.1	RYS101S3	RYB101S3-VBC6	
	0.2	RYS201S3	RYB201S3-VBC6	**RNFHA10-20**
	0.375	RYS371S3-VVX6	–	**RNFHA20-20**

Circuit voltage	Digital ES servo amplifilter		Power Filter
	Capacity (kW)	RYE series	
3-phase 200V	0.05	RYE.05D	**RNFHA05-20**
	0.1	RYE.10D	
	0.2	RYE.20D	
	0.4	RYE.40D	
	0.75	RYE.75D	**RNFHA10-20**
	1.5	RYE1.5D	**RNFHA20-20**
	2.2	RYE2.2D	**RNFHA30-20**
	3.0	RYE3.0D	
	3.7	RYE3.7D	

For further information related to FUJI inverter and servo system, contact FUJI.

Low-voltage control power transformers

■ Features

- Conformance to EN standards (EN61558-2-4:1997, EN61558-1:1997+A1) certified by TÜV
- Wide line-up includes 12 single-phase types, from 100VA to 5kVA, and 7 3-phase types, from 5kVA to 30kVA

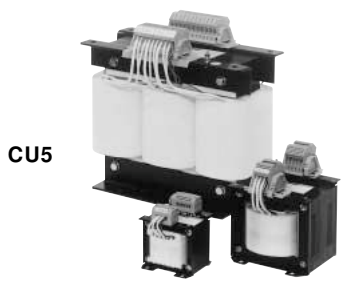

■ Specifications

Type	Single-phase transformer **CU4**	3-phase transformer **CU5**
Capacity	100VA, 150VA, 200VA, 300VA, 500VA, 750VA 1kVA, 1.5kVA, 2kVA, 3kVA, 4kVA, 5kVA	5kVA, 7.5kVA,10kVA,15kVA, 20kVA, 25kVA, 30kVA
Frequency	50/60Hz	50/60Hz
Primary voltage	200/220/230/240V	380/400/415/440V
Secondary voltage	100/110V	200/220V
Insulation class	100 to 200VA E Class 300 to 3kVA B Class 4kVA, 5kVA H Class	H Class
Degree of protection	IP20	IP20
Shield	Electrostatic shield	Electrostatic shield
Connection and terminal layout	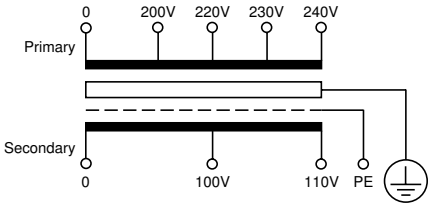	人－△ Yd1 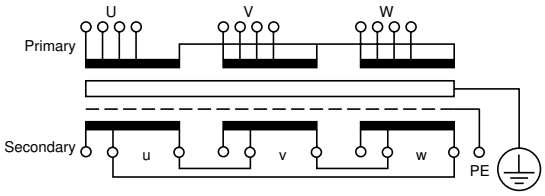

■ Type number nomenclature

CU4 10 – E 20 10 T

Basic type
CU4: For single-phase
CU5: For 3-phase

Rated capacity

10: 100VA	A1: 1kVA	A7: 7.5kVA
15: 150VA	AY: 1.5kVA	B1: 10kVA
20: 200VA	A2: 2kVA	BY: 15kVA
30: 300VA	A3: 3kVA	B2: 20kVA
50: 500VA	A4: 4kVA	BR: 25kVA
75: 750VA	A5: 5kVA	B3: 30kVA

Standard
Certified by TÜV

Secondary voltage
10 : 100/110V
20 : 200/220V

Primary voltage
20 : 200/220/230/240V
40 : 380/400/415/440V

Insulation class
E: E class, B: B class, H: H class

■ Ordering information

Specify the following:
1. Type number

MSA CONTROL - (11) 3961-1171 - comercial@msacontrol.com.br

■ Type and ratings

Single-phase Primary voltage: 200/220/230/240, Secondary voltage: 100/110V

Type	Rated capacity	Insulation class	Dimensions (mm)								Terminal diameter (mm)		Mass (kg)
			Fig. No.	A	D	E	F	X	H	J	Grounding	Others	
CU410-E2010T	100VA	E	Fig. 1	90	62	68	85	120	110	4.5 9	4	3	2.2
CU415-E2010T	150VA	E		100	69	84	105	130	115	4.5 9	4	3	3.2
CU420-E2010T	200VA	E		100	69	90	110	135	115	4.5 9	4	3	3.6
CU430-B2010T	300VA	B		135	88	70	90	120	150	6 10	4	3	5.3
CU450-B2010T	500VA	B		135	88	110	130	180	180	6 10	4	3	9.2
CU475-B2010T	750VA	B		160	110	109	140	180	195	8 12	4	4	12
CU4A1-B2010T	1kVA	B		160	110	119	150	190	195	8 12	4	4	14
CU4AY-B2010T	1.5kVA	B		185	115	116	150	190	220	8 12	4	4	19
CU4A2-B2010T	2kVA	B		185	115	144	175	210	220	8 12	4	4	24
CU4A3-B2010T	3kVA	B	Fig. 2	230	130	160	195	260	250	8 12	5	4	39
CU4A4-H2010T	4kVA	H		250	180	170	215	300	280	10 15	5	6	47
CU4A5-H2010T	5kVA	H		250	180	180	230	310	280	10 15	5	6	51

3-phase Primary voltage: 380/400/415/440, Secondary voltage: 200/220V

Type	Rated capacity	Insulation class	Dimensions (mm)								Terminal diameter (mm)		Mass (kg)
			Fig. No.	A	D	E	F	X	H	J	Grounding	Others	
CU5A5-H4020T	5kVA	H	Fig. 3	330	160	138	166	210	330	10 15	5	4	46
CU5A7-H4020T	7.5kVA	H		400	200	146	174	250	380	10 15	5	4	69
CU5B1-H4020T	10kVA	H	Fig. 4	400	200	161	189	280	400	10 15	5	6	83
CU5BY-H4020T	15kVA	H		450	200	198	230	330	440	10 18	5	6	108
CU5B2-H4020T	20kVA	H		450	200	208	240	340	440	12 18	6	6	119
CU5BR-H4020T	25kVA	H		500	300	200	240	350	480	14 21	6	6	143
CU5B3-H4020T	30kVA	H		500	300	220	260	390	480	14 21	6	6	167

■ Dimensions, mm

Fig. 1

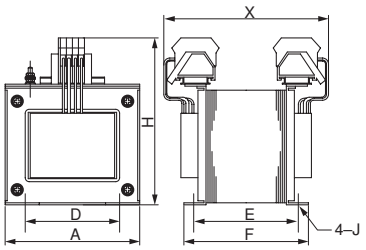

Fig. 2

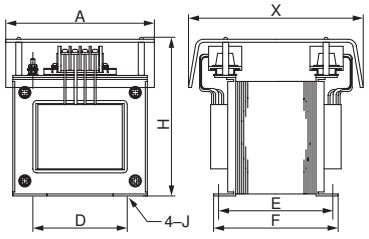

Fig. 3

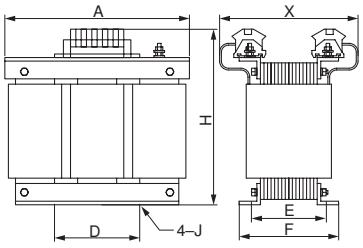

Fig. 4

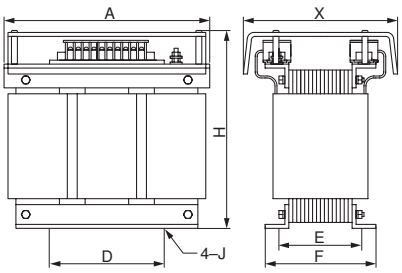

UL506 and UL1446 approved low-voltage control power transformers

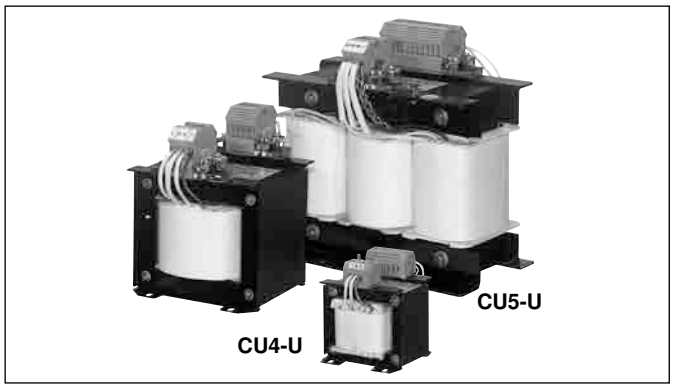

■ Features

- Approval for UL506 (Specialty Transformer) and UL1446 (System of Insulating Materials — General)
  UL506: File No. E243896
  UL1446: File No. E243895
- All products have UL, c-UL, and CE marking.
- A wide product range is available.

■ Specifications

Type	Single-phase transformer **CU4-U**	3-phase transformer **CU5-U**
Capacity	100VA, 200VA, 300VA, 500VA, 750VA 1kVA, 1.5kVA, 2kVA, 3kVA, 5kVA	5kVA, 7.5kVA,10kVA,15kVA, 20kVA, 25kVA, 30kVA
Frequency	50/60Hz	50/60Hz
Primary voltage	200/210/220/230/240V 380/400/415/440/460/480V	200/208/220/230/240V 380/400/415/440/460/480V
Secondary voltage	100/110/115/120V 200/208/220/230/240V	200/220V
Insulation class	100 to 200VA A Class 300VA to 3kVA B Class 5kVA H Class	H Class
Degree of protection	IP00	IP00
Shield	Electrostatic shield	Electrostatic shield
Connection and terminal layout	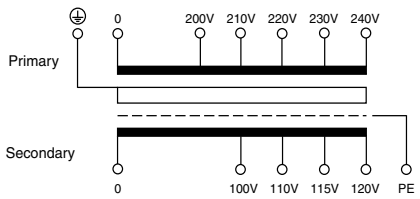	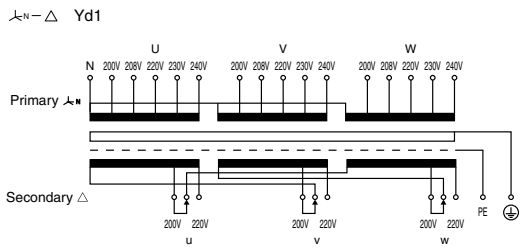

■ Type number nomenclature

CU4 10 – A 20 10 U

Basic type
CU4: For single-phase
CU5: For 3-phase

Rated capacity

10: 100VA	A1: 1kVA	A7: 7.5kVA
20: 200VA	AY: 1.5kVA	B1: 10kVA
30: 300VA	A2: 2kVA	BY: 15kVA
50: 500VA	A3: 3kVA	B2: 20kVA
75: 750VA	A5: 5kVA	BR: 25kVA
		B3: 30kVA

Insulation class
A: A class, B: B class, H: H class

Primary voltage
20 : 200V system (Refer to the above specifications)
40 : 400V system (Refer to the above specifications)

Secondary voltage
10 : 100V system (Refer to the above specifications)
20 : 200V system (Refer to the above specifications)

Standard
UL approved

■ Ordering information

Specify the following:
1. Type number

MSA CONTROL - (11) 3961-1171 - comercial@msacontrol.com.br

■ Type and ratings

Single-phase

Type	Rated capacity	Insulation class	Dimensions (mm)							Terminal diameter (mm)		Mass (kg)
			Fig.	A	D	E	X	H	Mounting hole J	Grounding	Others	
CU410-A 2010U	100VA	A	Fig. 1	90	62	68	120	120	4.5 x 9	4	3	2.2
CU420-A 2010U	200VA	A		100	69	90	135	125	4.5 x 9	4	3	3.6
CU430-B 2010U	300VA	B		135	88	70	120	160	6 x 10	4	3	5.3
CU450-B 2010U	500VA	B		135	88	110	180	180	6 x 10	4	3	9.2
CU475-B 2010U	750VA	B		160	110	109	180	195	8 x 12	4	4	12
CU4A1-B 2010U	1kVA	B		160	110	119	190	195	8 x 12	4	4	14
CU4AY-B 2010U	1.5kVA	B		185	115	116	190	220	8 x 12	4	4	19
CU4A2-B 2010U	2kVA	B		185	115	144	230	220	8 x 12	4	4	24
CU4A3-B 2010U	3kVA	B	Fig. 2	230	130	160	260	260	8 x 12	5	4	39
CU4A5-H 2010U	5kVA	H		250	180	180	310	290	10 x 15	5	6	51

3-phase

Type	Rated capacity	Insulation class	Dimensions (mm)							Terminal diameter (mm)		Mass (kg)
			Fig.	A	D	E	X	H	Mounting hole J	Grounding	Others	
CU5A5-H 4020U	5kVA	H	Fig. 3	330	160	138	210	330	10 x 15	5	4	46
CU5A7-H 4020U	7.5kVA	H		400	200	146	250	380	10 x 15	5	4	69
CU5B1-H 4020U	10kVA	H	Fig. 4	400	200	161	280	400	10 x 15	5	6	83
CU5BY-H 4020U	15kVA	H		450	200	198	330	450	12 x 18	5	6	108
CU5B2-H 4020U	20kVA	H		450	200	208	340	450	12 x 18	6	6	119
CU5BR-H 4020U	25kVA	H		500	300	200	350	490	14 x 21	6	6	143
CU5B3-H 4020U	30kVA	H		500	300	220	390	490	14 x 21	6	6	167

■ Dimensions, mm

Fig. 1

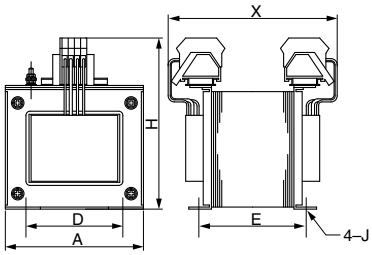

Fig. 2

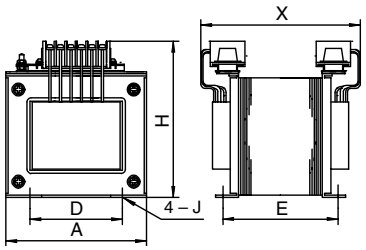

Fig. 3

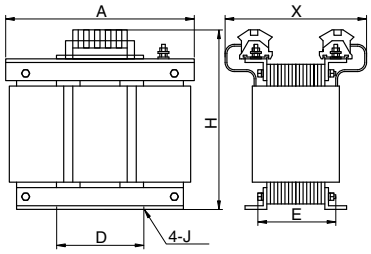

Fig. 4

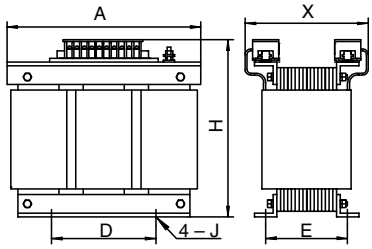

Catalog Disclaimer
The information contained in this catalog does not constitute an express or implied warranty of quality, any warranty of merchantability of fitness for a particular purpose is hereby disclaimed.

Since the user's product information, specific use application, and conditions of use are all outside of Fuji Electric FA Components & Systems'control, **it shall be the responsibility of the user to determine the suitability of any of the products mentioned for the user's application.**

One Year Limited Warranty
The products identified in this catalog shall be sold pursuant to the terms and conditions identified in the "Conditions of Sale" issued by Fuji Electric FA with each order confirmation.

Except to the extent otherwise provided for in the Conditions of Sale issued by Fuji Electric FA, Fuji Electric FA warrants that the Fuji Electric FA products identified in this catalog shall be free from significant defects in materials and workmanship provided the product has not been: 1) repaired or altered by others than Fuji Electric FA; 2) subjected to negligence, accident, misuse, or damage by circumstances beyond Fuji Electric FA's control; 3) improperly operated, maintained or stored; or 4) used in other than normal use or service. This warranty shall apply only to defects appearing within one (1) year from the date of shipment by Fuji Electric FA, and in such case, only if such defects are reported to Fuji Electric FA within thirty (30) days of discovery by purchaser. Such notice should be submitted in writing to Fuji Electric FA at 5-7, Nihonbashi Odemma-cho, Chuo-ku, Tokyo, Japan. The sole and exclusive remedy with respected to the above warranty whether such claim is based on warranty, contract, negligence, strict liability or any other theory, is limited to the repair or replacement of such product or, at Fuji Electric FA's option reimbursement by Fuji Electric FA of the purchase price paid to Fuji Electric FA for the particular product. **Fuji Electric FA does not make any other representations or warranties, whether oral or in writing, expressed or implied, including but not limited to any warranty regarding merchantability or fitness for a particular purpose.** Except as provided in the Conditions of Sale, no agent or representative of Fuji Electric FA is authorized to modify the terms of this warranty in writing or orally.

In no event shall Fuji Electric FA be liable for special, indirect or consequential damages, including but not limited to, loss of use of the product, other equipment, plant and power system which is installed with the product, loss of profits or revenues, cost of capital, or claims against the purchaser or user of the product by its customers resulting from the use of information, recommendations and descriptions contained herein. The purchaser agrees to pass on to its customers and users, in writing at the time inquiries and orders are received by buyer, Fuji Electric FA's warranty as set forth above.

⚠ Caution "Safety precautions"
- Operate (keep) in the environment specified in the operating instructions and manual. High temperature, high humidity, condensation, dust, corrosive gases, oil, organic solvents, excessive vibration or shock might cause electric shock, fire, erratic operation or failure.
- Follow the regulations of industrial wastes when the product is to be discarded.
- The products covered in this catalogs have not been designed or manufactured for use in equipment or systems which, in the event of failure, can lead to loss of human life.
- If you intend to use the products covered in this catalog for special applications, such as for nuclear energy control, aerospace, medical, or transportation, please consult our Fuji Electric FA agent.
- Be sure to provide protective measures when using the product covered in these catalogs in equipment which, in the event of failure, may lead to loss of human life or other grave results.
- Follow the directions of the operating instructions when mounting the product.